California Well Standards

Water wells • Monitoring wells • Cathodic protection wells

Bulletin 74-90

(Supplement to Bulletin 74-81)

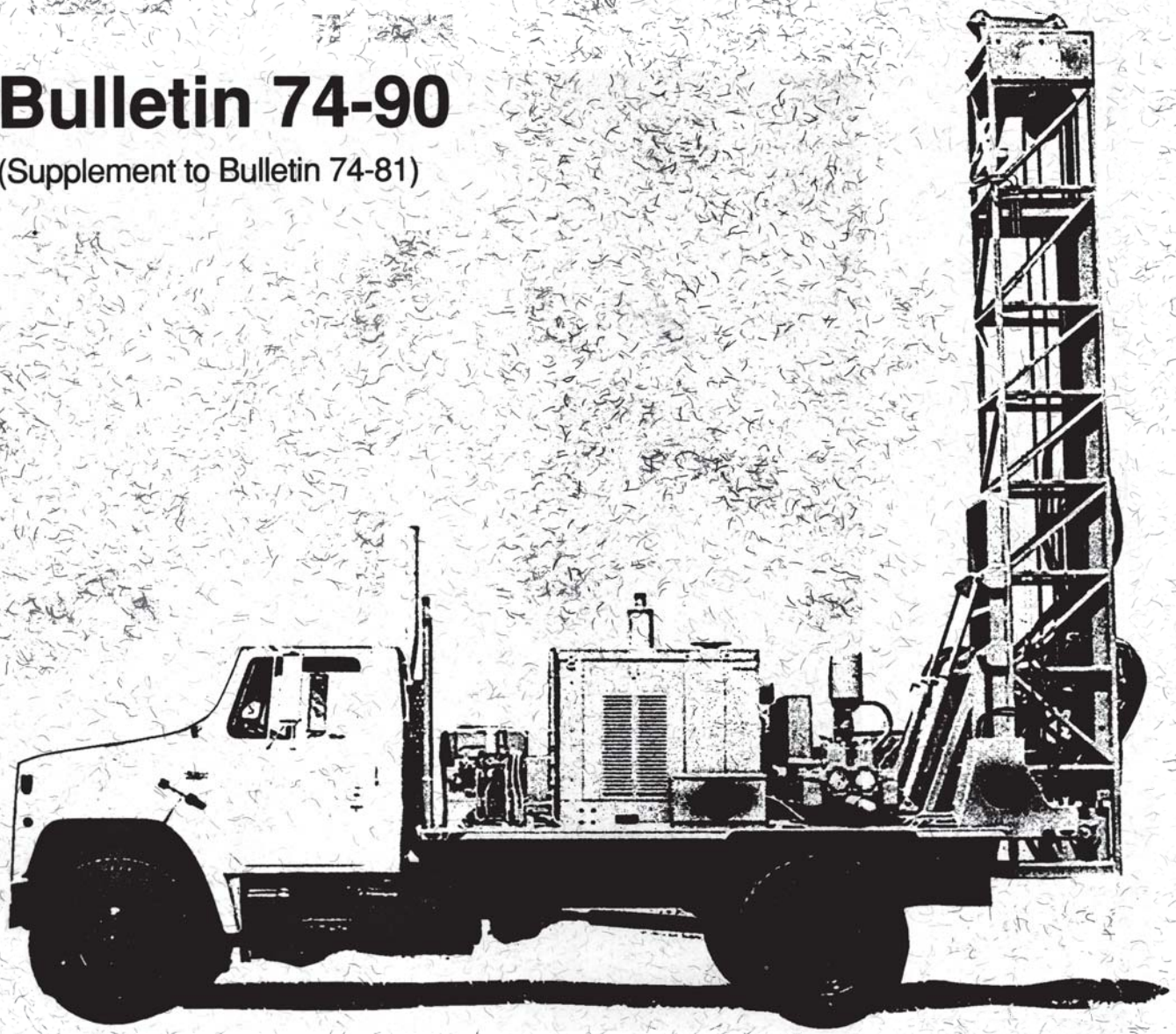

California
Department
of Water Resources
June 1991

This bulletin is available free to all well drillers licensed by the State of California and local agencies that enforce these standards. It is available at a cost of $10 per copy to all others. Make checks payable to Department of Water Resources. California residents add current sales tax.

To order additional copies of this bulletin write or call:

- California Department of Water Resources
  Bulletins & Reports Section
  P. O. Box 942836
  Sacramento, CA 94236-0001
  (916) 445-9371

Questions or comments about this bulletin should be directed to:

- Well Standards Coordinator
  California Department of Water Resources
  Division of Local Assistance
  P.O. Box 942836
  Sacramento, CA 94236-0001
  (916) 445-9248

Printed on recycled paper.

Notice

This Bulletin is temporarily considered to be a draft. The California Department of Water Resources plans to adopt this Bulletin as final after a public review and comment period. The Department will announce in the future when this Bulletin is final. The Department will also announce any changes to this Bulletin. Announcement will be made through the Department's well standards mailing list.

This page should be removed from this Bulletin when it is announced that the Bulletin has been approved as final.

California Well Standards

Water wells • Monitoring wells • Cathodic protection wells

Bulletin 74-90

(Supplement to Bulletin 74-81)

David N. Kennedy
Director
Department of Water Resources

Douglas P. Wheeler
Secretary for Resources
The Resources Agency

Pete Wilson
Governor
State of California

California
Department
of Water Resources
June 1991

FOREWORD

During an average year about forty percent of California's water supply comes from ground water. Ground water is used for agricultural, industrial, domestic, and municipal water supplies. Protecting the quality of California's ground water is essential to California's future.

Improperly constructed wells can allow pollution of ground water to the point that the water is either unusable or it requires expensive treatment. The California Water Code requires the Department of Water Resources (DWR) to develop minimum standards for water wells, monitoring wells, and cathodic protection wells to protect ground water quality.

This bulletin is a supplement to DWR Bulletin 74-81, *Water Well Standards: State of California, December 1981*. Standards in Bulletin 74-81 and this bulletin are **minimum** requirements for construction, alteration, maintenance, and destruction of water wells, monitoring wells, and cathodic protection wells in California.

This bulletin was prepared in cooperation with the State Water Resources Control Board. The Board adopted a model water well, monitoring well, and cathodic protection well ordinance that implements DWR well standards. All California cities and counties, and some water agencies are required to enact local well ordinances that meet or exceed DWR standards, or they must enforce the Board's model ordinance as if it were their own.

Sometimes well standards adopted by local agencies must be more stringent than DWR's statewide standards because of local conditions. Local agencies play a critical role in protecting ground water quality.

Continued cooperation is needed between the public, industry, local agencies, and the State to ensure that these well standards remain adequate and are put into practice. California's water supply future depends on this cooperation.

David N. Kennedy, Director
Department of Water Resources

State of California
PETE WILSON, Governor

The Resources Agency
DOUGLAS P. WHEELER, Secretary for Resources

Department of Water Resources
DAVID N. KENNEDY, Director

Lawrence A. Mullnix
Deputy Director

Robert G. Potter
Deputy Director

James U. McDaniel
Deputy Director

L. Lucinda Chipponeri
Assistant Director for Legislation

Susan N. Weber
Chief Counsel

Division of Local Assistance:

Suzanne Butterfield ..... Acting Chief

Technical Support Branch:

Dennis Letl ..... Chief

This report was prepared under the supervision of:

Carl J. Hauge ..... Chief Hydrogeologist

By:

Michael P. Floyd ..... Staff Ground Water Hydrology Specialist
Edwin A. Ritchie ..... Senior Engineer (Retired)

With Special Assistance From:

Nancy A. Hoagland ..... Office Technician
Marilea Smith ..... Office Technician
Sheila N. Darling ..... Office Technician

With Assistance From:

Gloria J. Abernathy ..... Office Technician
Debbie De Anda ..... Executive Secretary I
Alice Dyer ..... Research Writer
Lynda Herren ..... Supervisor of Technical Publications
Bertha Jalilie ..... Student Assistant
Rose Luna ..... Office Technician
Rhonda L. Payne ..... Office Technician
Jean J. Robbins ..... Office Assistant II
Stan Taylor ..... Environmental Specialist III
Cheryl L. Zeh ..... Research Writer

In Cooperation with the State Water Resources Control Board

State of California
The Resources Agency
Department of Water Resources
CALIFORNIA WATER COMMISSION

MARTIN A. MATICH, Chairman, San Bernardino
JAMES J. LENIHAN, Vice Chairman, Mountain View

HAROLD W. BALL ..... La Mesa
STANLEY M. BARNES ..... Visalia
KATHERINE B. DUNLAP ..... Los Angeles
CLAIR A. HILL ..... Redding
JAMES M. STUBCHAER ..... Santa Barbara
AUDREY Z. TENNIS ..... Chico

ORVILLE L. ABBOTT
Executive Officer and Chief Engineer

TOM Y. FUJIMOTO
Assistant Executive Officer

The CALIFORNIA WATER COMMISSION serves as a policy advisory body to the Director of the Department of Water Resources on all California water resource matters. The nine-member citizen commission provides a water resources forum for the people of the State, acts as liaison between the legislative and executive branches of State government, and coordinates federal, State, and local water resources efforts.

CALIFORNIA WELL STANDARDS

TABLE OF CONTENTS

Page

Foreword iii

Organization v

Department of Water Resources v
California Water Commission vi

Acknowledgements xvi

General Introduction .....

History of DWR Standards 3
Relationship of DWR Well Standards Publications 4
Organization of This Supplement 6
Limitations of Standards 6
Applicability 6

REVISIONS TO WATER WELL STANDARDS

(Refer to page 10 which summarizes portions of Bulletin 74-81 that are deleted by these revisions.)

Introduction 9

Standards 11

Part I. General 11

Section 1. Definitions 11

I. Exploration Hole (or Boring) 11
J. Test Wells 11
L. Enforcing Agency 11

Part II. Well Construction 12

Section 8. Well Location with Respect to Pollutants and Contaminants, and Structures 12

A. Separation 12
B. Gradients 13
C. Flooding and Drainage 13
D. Accessibility 13

Table Of Contents (Cont'd)

Page

Section 9. Sealing the Upper Annular Space 13

A. Minimum Depth of Annular Surface Seal 14
1. Shallow ground water 14
2. Encroachment on known or potential sources of pollution or contamination 14
3. Areas of freezing 14
4. Vaults 14

B. Sealing Conditions 15
1. Wells drilled in unconsolidated, caving material 15
2. Wells drilled in unconsolidated material with significant clay layers 16
3. Wells drilled in soft consolidated formations (extensive clays, sandstones, etc.) 16
8. Wells that penetrate zones containing poor-quality water, pollutants, or contaminants 17

D. Sealing Material 17
1. Water 17
2. Cement 17
a. Neat Cement 18
b. Sand Cement 18
c. Concrete 19
d. Mixing 19
3. Bentonite 19

E. Radial Thickness of Seal 20

F. Placement of Seal 20
1. Obstructions 20
2. Centralizers 20
3. Foundation and Transition Seals 21
4. Timing and Method of Placement 21
5. Ground Water Flow 22
6. Verification 22
7. Pressure 22

Section 10. Surface Construction Features 22

A. Openings 22
5. Bases 22

B. Well Pits or Vaults 23

F. Backflow Prevention 24

Section 12. Casing 24

A. Casing Material 24
3. Plastic 24
a. Thermoplastics 24
(1) ABS Pipe 24
(2) PVC Pipe 24
(3) Pressure-Rated PVC Pipe 24
b. Thermoset Plastics 25
(1) Filament Wound Resin Pipe 25
(2) Centrifugally Cast Resin Pipe 25
(3) Reinforced Plastic Mortar Pressure Pipe 25

Table Of Contents (Cont'd)

Page

(4) Glass Fiber Reinforced Resin Pressure Pipe 25
c. Drinking Water Supply 25
d. Storage, Handling, and Transportation 25
e. Large Diameter Wells 25
5. Unacceptable Casing Materials 25
6. Other Materials 25
B. Casing Installation 25
1. Metallic Casing 26
2. Plastic Casing 26
a. ASTM D2564 26
b. ASTM D2855 26

Section 14. Well Development 26

Part III. Destruction of Wells 28

Section 21. Definition of "Abandoned" Well 28

Section 23. Requirements for Destroying Wells 28

Subsection A. 28
1. Obstructions 28
Subsection B. 29
1. Wells situated in unconsolidated material in an unconfined ground water zone 29

Table Of Contents (Cont'd)

Page

MONITORING WELL STANDARDS

Introduction ... 33

History of Monitoring Wells ... 33
Types of Monitoring Wells ... 34
Authority and Responsibilities of Other Agencies ... 37
Scope, Organization, and Limitations of Standards ... 38

Standards . 39

Part I. General 39

Section 1. Definitions ... 39

A. Monitoring Well ... 39
B. Exploration Hole (or Boring) ... 39
C. Enforcing Agency ... 39

Section 2. Application to Well Type ... 39

Section 3. Exemptions for Unusual Conditions ... 39

Section 4. Exclusions ... 39

Section 5. Special Standards ... 40

Section 6. Responsible Parties ... 40

Section 7. Reports ... 40

Part II. Monitoring Well Construction ... 41

Section 8. Well Location with Respect to Pollutants and Contaminants, and Structures ... 41

A. Separation ... 41
B. Flooding and Drainage ... 41
C. Accessibility ... 41
D. Disposal of Wastes When Drilling in Contaminated or Polluted Areas ... 41

Section 9. Sealing the Upper Annular Space ... 41

A. Minimum Depth of Annular Seal ... 41
1. Water quality monitoring wells and monitoring wells constructed in areas of known or suspected pollution or contamination ... 41
2. Other Monitoring Wells ... 42
3. Sealing Off Strata ... 42
4. Shallow Water Level Observation Wells ... 42
5. Areas of Freezing ... 42
6. Vaults ... 42

Table Of Contents (Cont'd)

Page

B. Sealing Conditions 42
1. Temporary Conductor Casing 42
2. Permanent Conductor Casing 42
C. Radial Thickness of Seal 43
D. Sealing Material 43
1. Water 43
2. Cement-Based Sealing Materials 43
a. Additives 43
b. Cooling Water 43
3. Bentonite-Based Sealing Materials 43
E. Transition Seal 44
F. Placement of Annular Seal Material 44

Section 10. Surface Construction Features 45

A. Locking Cover 45
B. Casing Cap 45
C. Flooding 45
D. Bases 45
E. Vaults 45
F. Protection From Vehicles 46

Section 11. Filter Pack 46

Section 12. Casing 47

A. Casing Material 47
1. Chemical Compatibility 47
2. Used Casing 47
3. Plastic and Steel Casing 47
a. ASTM D3296 47
b. ASTM D3295 47
B. Multiple Screens 48
C. Bottom Plugs 48
D. Casing Installation 48
1. Cleanliness 48
2. Joining Plastic Casing 48
3. Impact 48

Section 13. Well Development 48

A. Mechanical Surging 48
B. Overpumping and Pump Surging 49
C. Air Development 49
D. Water Jetting 49
E. Chemical Development 49

Section 14. Rehabilitation and Repair of Monitoring Wells 49

Section 15. Temporary Cover 49

Table Of Contents (Cont'd)

Page

Part III. Destruction of Monitoring Wells 50

Section 16. Purpose of Destruction 50

Section 17. Definition of "Abandoned" Monitoring Well 50

Section 18. General Requirements 50

Section 19. Requirements for Destroying Monitoring Wells and Exploration Holes 51

A. Monitoring Wells 51
1. Preliminary Work 51
2. Sealing Conditions 51
B. Exploratory Borings 52
C. Placement of Material 52
1. Placement Method 52
2. Timing of Placement 53
3. Ground Water Flow 53
4. Sealing Pressure 53
5. Verification 53
D. Sealing and Fill Materials 53
E. Additional Requirements for Monitoring Wells and Exploratory Borings in Urban Areas 53
F. Temporary Cover 54

Table Of Contents (Cont'd)

Page

CATHODIC PROTECTION WELL STANDARDS

Introduction 57

Electrolytic Corrosion 57
Cathodic Protection 57
Cathodic Protection Wells 57
Corrosion Coordinating Committees 62
Need for Cathodic Protection Well Standards 63
History of Cathodic Protection Well Standards 63
Scope of Standards 63
Organization of Standards 63

Standards 64

Part I. General 64

Section 1. Definitions 64

A. Cathodic Protection Well 64
B. Enforcing Agency 64
C. Casing 64
D. Conductor Casing 64

Section 2. Exemptions Due to Unusual Conditions 64

Section 3. Special Standards 64

Section 4. Responsible Parties 64

Section 5. Reports 65

Part II. Cathodic Protection Well Construction 66

Section 6. Well Location with Respect to Pollutants, Contaminants, and Structures 66

A. Separation 66
B. Flooding and Drainage 66
C. Accessibility 66

Section 7. Sealing the Upper Annular Space 66

A. Minimum Depth of Annular Seal 66
1. Minimum Depth 66
2. Fill 66
3. Sealing-Off Strata 67
B. Sealing Conditions 67
C. Radial Thickness of Seal 67
D. Sealing Material 67
E. Placement of Seal 67

Table Of Contents (Cont'd)

Page

Section 8. Surface Construction Features 67

A. Locking Cover 67
B. Casing Cap 67
C. Flooding 67
D. Bases 67
E. Vaults 68
F. Protection From Vehicles 68

Section 9. Casing 69

Section 10. Sealing-Off Strata 69

Case 1. Upper Stratum 69
Case 2. Bottom Stratum 69
Case 3. Multiple Strata 69

Section 11. Repair of Cathodic Protection Wells 70

Section 12. Temporary Cover 70

Part III. Destruction of Cathodic Protection Wells 71

Section 13. Purpose of Destruction 71

Section 14. Definition of "Abandoned" Cathodic Protection Wells 71

Section 15. General Requirements 71

Section 16. Requirements for Destroying Cathodic Protection Wells 71

A. Preliminary Work 71
B. Filling and Sealing Conditions 72
1. Wells that only penetrate unconsolidated material and a single "zone" of ground water 72
2. Wells that penetrate several water-bearing strata 72
3. Wells penetrating fractured rock 72
4. Wells in nonfractured consolidated strata 72
5. Wells penetrating water-bearing zones or aquifers of special significance 72
C. Placement of Material 72
1. Placement Method 73
2. Timing of Placement 73
3. Ground Water Flow 73
4. Sealing Pressure 73
5. Verification 73
D. Sealing Materials 73
E. Fill Material 73
F. Additional Requirements for Destruction of Cathodic Protection Wells in Urban Areas 74
G. Temporary Cover 74

Table Of Contents (Cont'd)

Page

FIGURES

Introduction:

Figure 1. Years DWR Well Standards Bulletins in Effect 5

Revisions to Water Well Standards:

All figures referenced in the text are in DWR Bulletin 74-81 which is enclosed in the back cover of this Bulletin.

Monitoring Well Standards:

Figure 2. Monitoring Well Types 35

Figure 3. Cross Section of a Typical Monitoring Well 36

Cathodic Protection Well Standards:

Figure 4. Electrolytic Corrosion of a Buried Pipeline 58

Figure 5. Cathodic Protection of a Buried Pipeline 59

Figure 6. Cross Section of a Typical Cathodic Protection Well 61

TABLES

Table 1. Deletions in Bulletin 74-81 10

APPENDICES

Appendix A - Definition of Terms 77

Appendix B - References 78

Books and Pamphlets 78
Periodicals 82
Laws, Rules and Regulations 82

ENCLOSURE

Water Well Standards: State of California, Bulletin 74-81, December 1981 . . . . . Inside Back Cover

ACKNOWLEDGEMENTS

This bulletin was prepared after consideration of comments and suggestions from public agencies and private parties. State agencies that provided input include:

- State Water Resources Control Board,
- Regional Water Quality Control Boards,
- Department of Health Services, and,
- California Integrated Waste Management Board.

Many comments and suggestions were received from California cities, counties, and water agencies. Private parties that provided input include the California Groundwater Association, individual well contractors, well construction material and equipment suppliers, and consultants. The Department of Water Resources thanks all persons that provided comments during the preparation of this bulletin.

GENERAL INTRODUCTION

GENERAL INTRODUCTION

Improperly constructed, altered, maintained, or destroyed wells are a potential pathway for introducing poor quality water, pollutants, and contaminants to good-quality ground water. The potential for ground water quality degradation increases as the number of wells and borings in an area increases.

Improperly constructed, altered, maintained, or destroyed wells can facilitate ground water quality degradation by allowing:

- Pollutants, contaminants, and water to enter a well bore or casing;
- Poor quality surface and subsurface water, pollutants, and contaminants to move between the casing and borehole wall;
- Poor quality ground water, pollutants, and contaminants to move from one stratum or aquifer to another; and,
- The well bore to be used for illegal waste disposal.

Permanently inactive or "abandoned" wells that have not been properly destroyed pose a serious threat to water quality. They are frequently forgotten and become dilapidated with time, and thus can become conduits for ground water quality degradation. In addition, humans and animals can fall into wells left open at the surface.

History of DWR Standards

The Department of Water Resources has responsibility for developing standards for wells for the protection of water quality under California Water Code Section 231. Water Code Section 231 was enacted in 1949.

Statewide standards for water wells were first formally published in 1968 as DWR Bulletin 74, *Water Well Standards: State of California*. Standards for cathodic protection wells followed in 1973 as Bulletin 74-1, *Cathodic Protection Well Standards: State of California*. Bulletins 74 and 74-1 are now out of print.

A revised edition of Bulletin 74 was published in 1981 as Bulletin 74-81 *Water Well Standards: State of California*. Bulletin 74-81 is enclosed in the back cover of this report.

The law for establishing and implementing well standards was changed significantly in 1986 by Assembly Bill 3127 and Senate Bill 1817 (now Chapters 1152 and 1373, Statutes of 1986). Assembly Bill 3127 (Water Code Section 13801) requires that:

(1) **By September 1, 1989**, the State Water Resources Control Board adopt a model well ordinance implementing DWR standards.

(2) **By January 15, 1990**, all counties and cities, and water agencies where appropriate, adopt a well ordinance that meets or exceeds DWR well standards.

(3) **By February 15, 1990**, the Board's model ordinance is to be enforced by any county, city, or water agency failing to adopt a well ordinance.

Senate Bill 1817 amended the Water Code to specifically include monitoring wells. It was previously assumed that monitoring wells were included in the collective term "well" used in the law.

As a first step in carrying out provisions of the amended law, the State Water Resources Control Board contracted with DWR to:

(1) Review and update water well standards in Bulletin 74-81;

(2) Establish minimum standards for monitoring wells; and,

(3) Update and replace cathodic protection well standards in Bulletin 74-1.

This Bulletin is a supplement to Bulletin 74-81. It was developed to satisfy the Department's contract with SWRCB, to respond to Department responsibilities under the Water Code, and to keep pace with technical advances during the ten-year period following publication of Bulletin 74-81.

An initial draft of this supplement was published in three sections and was sent to interested organizations and individuals for comment during the Fall of 1988. The Department held public hearings in Los Angeles, November 15, 1988 and in Oakland, November 17, 1988 to discuss the draft supplemental standards and receive public comment.

Several sets of written comments for the draft supplemental standards were received by DWR. Written and verbal comments on the standards were reviewed and appropriate changes were incorporated into *Final Draft Bulletin 74-90, California Well Standards; Water Wells, Monitoring Wells, Cathodic Protection Wells; Supplement to Bulletin 74-81*, January 1990.

Final Draft Bulletin 74-90 was published in November 1989 and was sent to interested organizations and individuals for comment. Comments were reviewed and appropriate changes were incorporated into this final bulletin.

Additional discussion on the history of DWR well standards is contained in Bulletin 74-81.

Relationship of DWR Well Standards Publications

DWR Bulletins 74-81 and 74-1 provided the Department's standards for water wells and cathodic protection wells just prior to this supplement. DWR standards for monitoring wells were generally the same as for water wells prior to this supplement and were included in Bulletin 74-81. The relationship of the various DWR well standards bulletins is illustrated in Figure 1.

Revised standards for water wells in this supplement replace only portions of the water well standards contained in Bulletin 74-81. This supplement is to be used together with Bulletin 74-81 for a complete description of DWR Water Well Standards.

Monitoring well standards are presented separately in this supplement and are in parallel form to the water well standards. Because many physical similarities exist between water wells and monitoring wells, the water well standards are referred to frequently in the monitoring well standards. Water well and monitoring well standards must be considered together for the construction, alteration, maintenance, and destruction of monitoring wells.

Cathodic protection well standards in this supplement replace those in Bulletin 74-1. Because of similarities between cathodic protection wells and water wells, water wells standards are referred to frequently in the cathodic protection well standards. Cathodic protection well standards and water well standards must be considered together for the construction, alteration, maintenance, and destruction of cathodic protection wells.

Figure 1. YEARS DWR WELL STANDARDS BULLETINS IN EFFECT

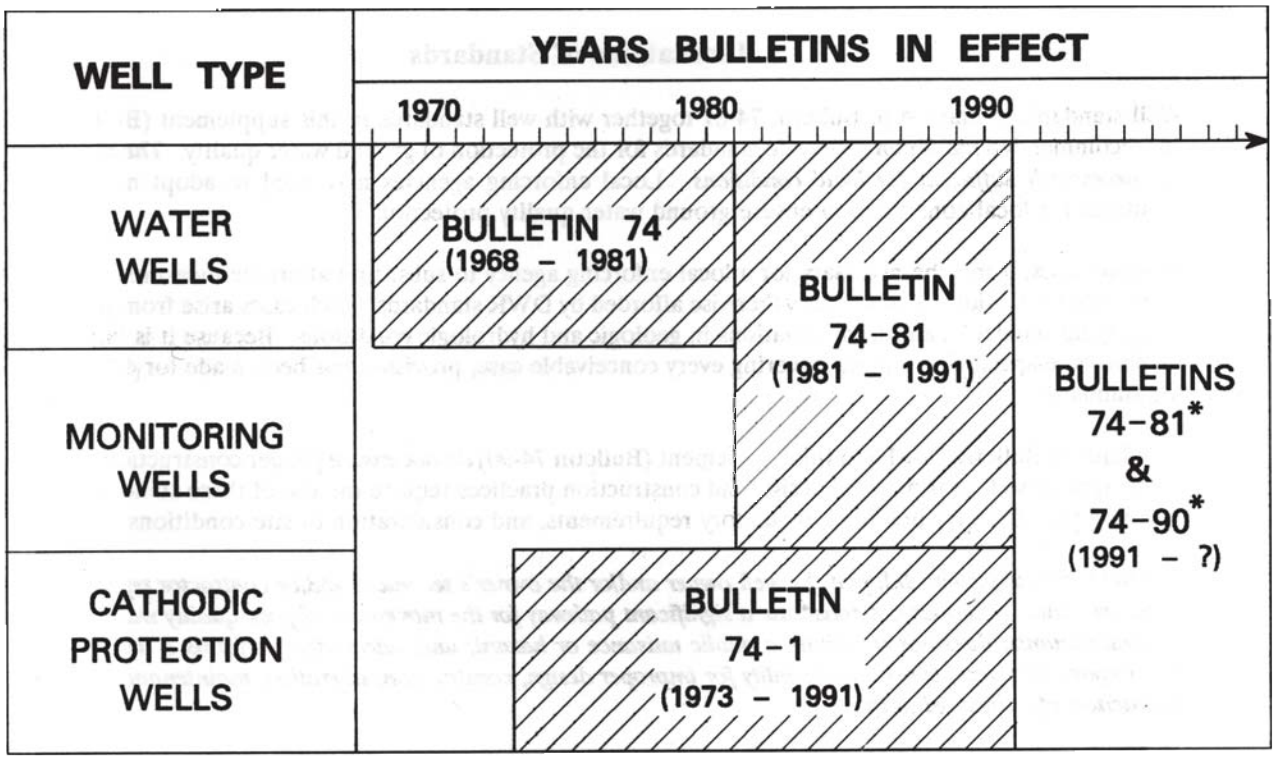

* Both bulletins are now required for water well, monitoring well, and cathodic protection well standards.

Organization of This Supplement

Standards in this supplement are presented in three parts:

(1) Revisions of some water well standards in Bulletin 74-81.

(2) Standards for monitoring wells.

(3) Updated standards for cathodic protection wells that were originally published in Bulletin 74-1.

Selected technical terms used in this supplement are listed and defined in Appendix A. A list of references is contained in Appendix B.

Limitations of Standards

Well standards contained in Bulletin 74-81 together with well standards in this supplement (Bulletin 74-90) are recommended ***minimum*** statewide standards for the protection of ground water quality. ***The standards are not necessarily sufficient for local conditions.*** Local enforcing agencies may need to adopt more stringent standards for local conditions to ensure ground water quality protection.

In some cases, it may be necessary for a local enforcing agency to substitute alternate measures or standards to provide protection equal to that otherwise afforded by DWR standards. Such cases arise from practicalities in applying standards, and from variations in geologic and hydrologic conditions. Because it is impractical to prepare "site-specific" standards covering every conceivable case, provision has been made for deviation from the standards.

Standards in Bulletin 74-81 and this supplement (Bulletin 74-90) ***do not ensure*** proper construction or function of any type of well. Proper well design and construction practices require the use of these standards together with accepted industry practices, regulatory requirements, and consideration of site conditions.

It is the ultimate responsibility of the well owner and/or the owner's technical and/or contractor representative(s) to ensure that a well does not constitute a significant pathway for the movement of poor-quality water, pollutants, or contaminants; does not constitute a public nuisance or hazard; and, adequately performs a desired function. The Department accepts no responsibility for improper design, construction, alteration, maintenance, function, or destruction of individual wells.

Applicability

Construction standards presented in this supplement apply to all water wells, monitoring wells, and cathodic protection wells constructed after the date of this supplement. Alteration, maintenance, and destruction standards presented in this supplement apply to all water wells, monitoring wells, cathodic protection wells, and "borings" regardless of their original date of construction. Standards contained in Bulletin 74-81 remain in effect except where modified by this supplement (Bulletin 74-90).

WATER WELLS

REVISIONS TO WATER WELL STANDARDS

INTRODUCTION

Revisions to standards in DWR Bulletin 74-81, Chapter II, are presented in this section. All standards in Bulletin 74-81 that are not revised by this supplement (Bulletin 74-90) remain unchanged and in effect. The organization and numbering system used for the revisions is the same as that in Bulletin 74-81.

Table 1, page 10, below, lists portions of Bulletin 74-81 that are replaced by this supplement (Bulletin 74-90). The user of this supplement should strike-out the replaced sections and paragraphs in the copy of Bulletin 74-81 that is enclosed in the back cover of this supplement.

Table 1

Deletions in Bulletin 74-81

Page	Portions of Bulletin 74-81 Replaced by this Supplement, Bulletin 74-90
24	Subsection I
25	Subsections J and L
26	Subsection A of Section 8, and Footnote No. 3
27	Entire Page, Including All Footnotes
29	Entire Page, Including All Footnotes
30	Entire Page, Including All Footnotes
32	Remainder of Item 3
34	Subsection D, and All Footnotes
35	Entire Page, Including All Footnotes
36	Item 2, Item 3, and Item 4
39	Item 5, Subsection B, and All Footnotes
40	Subsection F, and Footnote No. 1
43	Item 3, and Footnote No. 1
44	Remainder of Item 3, and Both Footnotes
45	Item 5, and Item 6, Subsection B, and Both Footnotes
46	Remainder of Subsection B, Section 14
48	Remainder of Section 14
52	Section 21, Footnote No. 2
53	Remainder of Section 21, Item 1
54	Item 1

STANDARDS

Part I. General

Section 1. Definitions.

Definitions A through H, and K (page 23 of Bulletin 74-81) are unchanged. The definition for observation and monitoring wells under Definition I has been deleted and replaced with a definition for "exploration hole." Observation or monitoring wells are now addressed in monitoring well standards in this supplement.

The new definition under Definition I is:

"I. Exploration Hole (or Boring). An uncased, temporary excavation whose purpose is the determination of hydrologic conditions at a site."

Definitions J and L have been revised to read as follows:

"J. Test Wells. Wells constructed to obtain information needed for design of other wells. Test wells should not be confused with "exploration holes", which are temporary. Test wells are cased and can be converted to other uses such as ground water monitoring and, under certain circumstances, to production wells.

L. Enforcing Agency. An agency designated by duly authorized local, regional, or State government to administer and enforce laws or ordinances pertaining to the construction, alteration, maintenance, and destruction of water wells. The California State Department of Health Services or the local health agency is the enforcing agency for community water supply wells."

Sections 2 through 7 (page 25 of Bulletin 74-81) are unchanged.

Part II. Well Construction

Section 8. Well Location With Respect to Pollutants and Contaminants, and Structures.

Note: The title of Section 8 has been revised.

Section 8 (page 26 of Bulletin 74-81) has been revised to read as follows:

"A. Separation. All water wells shall be located an adequate horizontal distance from known or potential sources of pollution and contamination. Such sources include, but are not limited to:

- sanitary, industrial, and storm sewers;
- septic tanks and leachfields;
- sewage and industrial waste ponds;
- barnyard and stable areas;
- feedlots;
- solid waste disposal sites;
- above and below ground tanks and pipelines for storage and conveyance of petroleum products or other chemicals; and,
- storage and preparation areas for pesticides, fertilizers, and other chemicals.

Consideration should also be given to adequate separation from sites or areas with known or suspected soil or water pollution or contamination.

The following horizontal separation distances are generally considered adequate where a significant layer of unsaturated, unconsolidated sediment less permeable than sand is encountered between ground surface and ground water. These distances are based on present knowledge and past experience. Local conditions may require greater separation distances to ensure ground water quality protection.

Potential Pollution or Contamination Source	Minimum Horizontal Separation Distance Between Well and Known or Potential Source
Any sewer line (sanitary, industrial, or storm; main or lateral)	50 feet
Watertight septic tank or subsurface sewage leaching field	100 feet
Cesspool or seepage pit	150 feet
Animal or fowl enclosure	100 feet

If the well is a radial collector well, minimum separation distances shall apply to the furthest extended point of the well.

Many variables are involved in determining the "safe" separation distance between a well and a potential source of pollution or contamination. No set separation distance is adequate and reasonable for all conditions. Determination of the safe separation distance for individual wells requires detailed evaluation of existing and future site conditions.

Where, in the opinion of the enforcing agency adverse conditions exist, the above separation distances shall be increased, or special means of protection, particularly in the construction of the well, shall be provided, such as increasing the length of the annular seal.

Lesser distances than those listed above may be acceptable where physical conditions preclude compliance with the specified minimum separation distances and where special means of protection are provided. Lesser separation distances must be approved by the enforcing agency on a case-by-case basis.

B. Gradients. Where possible, a well shall be located up the ground water gradient from potential sources of pollution or contamination. Locating wells up gradient from pollutant and contaminant sources can provide an extra measure of protection for a well. However, consideration should be given that the gradient near a well can be reversed by pumping, as shown in Figure 3 (page 28 of Bulletin 74-81), or by other influences.

C. Flooding and Drainage. If possible, a well should be located outside areas of flooding. The top of the well casing shall terminate above grade and above known levels of flooding caused by drainage or runoff from surrounding land. For community water supply wells, this level is defined as the:

> "...floodplain of a 100 year flood..." or above "...any recorded high tide...", (Section 64417, *Siting Requirements*, Title 22 of the California Code of Regulations.)

If compliance with the casing height requirement for community water supply wells and other water wells is not practical, the enforcing agency shall require alternate means of protection.

Surface drainage from areas near the well shall be directed away from the well. If necessary, the area around the well shall be built up so that drainage moves away from the well.

D. Accessibility. All wells shall be located an adequate distance from buildings and other structures to allow access for well modification, maintenance, repair, and destruction, unless otherwise approved by the enforcing agency."

Section 9. Sealing the Upper Annular Space.

Note: Sealing requirements are also described in Appendix B, page 67 of Bulletin 74-81.

Section 9 (page 29 of Bulletin 74-81) has been revised to read as follows:

"The space between the well casing and the wall of the drilled hole, often referred to as the annular space, shall be effectively sealed to prevent it from being a preferential pathway for movement of poor-quality water, pollutants, or contaminants. In some cases, secondary purposes of an annular seal are to protect casing against corrosion or degradation, ensure the structural integrity of the casing, and stabilize the borehole wall.

A. Minimum Depth of Annular Surface Seal. The annular surface seal for various types of water wells shall extend from ground surface to the following minimum depths:

Well Type	Minimum Depth Seal Must Extend Below Ground Surface
Community Water Supply	50 feet
Industrial	50 feet
Individual Domestic	20 feet
Agricultural	20 feet
Air-Conditioning	20 feet
All Other Types	20 feet

1. Shallow ground water. Exceptions to minimum seal depths can be made for shallow wells at the approval of the enforcing agency, where the water to be produced is at a depth less than 20 feet. In no case shall an annular seal extend to a total depth less than 10 feet below land surface. The annular seal shall be no less than 10 feet in length.

   Caution shall be given to locating a well with a 'reduced' annular seal with respect to sources of pollution or contamination. Such precautions include horizontal separation distances greater than those listed in Section 8, page 12, above.

2. Encroachment on known or potential sources of pollution or contamination. When, at the approval of the enforcing agency, a water well is to be located closer to a source of pollution or contamination than allowed by Section 8, page 12, above, the annular space shall be sealed from ground surface to the first impervious stratum, if possible. The annular seal for all such wells shall extend to a minimum depth of 50 feet.

3. Areas of freezing. The top of an annular surface seal may be below ground surface in areas where freezing is likely, but in no case more than 4 feet below ground surface. 'Freezing' areas are those where the mean length of the freeze-free period described by the National Weather Service is less than 100 days. In other words, 'freezing' areas are where temperatures at or below 32 degrees Fahrenheit are likely to occur on any day during a period of 265 or more days each year. In general, these areas include:

   portions of Modoc, Lassen, and Siskiyou Counties;

   - portions of the North Lahontan area including the eastern slope of the Sierra Nevada and related valleys north of Mount Whitney and Mono Lake; and,
   - the area of Lake Arrowhead in the San Bernardino Mountains.

4. Vaults. At the approval of the enforcing agency, the top of an annular surface seal and well casing can be below ground surface where traffic or other conditions require, if the seal and casing extend to a watertight and structurally sound subsurface vault, or equivalent feature. In no case shall the top of the annular surface seal be more

than 4 feet below ground surface. The vault shall extend from the top of the annular seal to at least ground surface.

The use of subsurface vaults to house the top of water wells below ground surface is rare and is discouraged due to susceptibility to the entrance of surface water, pollutants, and contaminants. Where appropriate, pitless adapters should be used in place of vaults.

B. Sealing Conditions. The following requirements are to be observed for sealing the annular space.

1. Wells drilled in unconsolidated, caving material. An 'oversized' hole, at least 4 inches greater in diameter than the outside diameter of the well casing, shall be drilled and a conductor casing temporarily installed to at least the minimum depth of annular seal specified in Subsection A, page 14, above. Permanent conductor casing may be used if it is installed in accordance with Item 3, page 16, below, and Item 5 (page 32 of Bulletin 74-81) and if it extends at least to the depth specified in Subsection A, above. One purpose of conductor casing is to hold the annular space open during well drilling and during the placement of the well casing and annular seal.

Temporary conductor casing shall be withdrawn as sealing material is placed between the well casing and borehole wall, as shown in Figure 4A (page 31 of Bulletin 74-81). Sealing material shall be placed at least within the interval specified in Subsection A, above. The sealing material shall be kept at a sufficient height above the bottom of the temporary conductor casing as it is withdrawn to prevent caving of the borehole wall.

Temporary conductor casing may be left in place in the borehole after the placement of the annular seal only if it is impossible to remove because of unforeseen conditions and not because of inadequate drilling equipment, or if its removal will seriously jeopardize the integrity of the well and the integrity of subsurface barriers to pollutant or contaminant movement. Temporary conductor casing may be left in place only at the approval of the enforcing agency on a case-by-case basis.

Every effort shall be made to place sealing material between the outside of temporary conductor casing that cannot be removed and the borehole wall to fill any possible gaps or voids between the conductor casing and the borehole wall. At least two inches of sealing material shall be maintained between the conductor casing and well casing. At a minimum, sealing material shall extend through intervals specified in Subsection A, above.

Sealing material can often be placed between temporary conductor casing that cannot be removed and the borehole wall by means of pressure grouting techniques, as described below and in Appendix B (page 67 of Bulletin 74-81). Other means of placing sealing material between the conductor casing and the borehole wall can be used, at the approval of the enforcing agency.

Pressure grouting shall be accomplished by perforating temporary conductor casing that cannot be removed, in place. The perforations are to provide passages for sealing material to pass through the conductor casing to fill any spaces and voids between the casing and borehole wall. Casing perforations shall be a suitable size and density to allow the passage of sealing materials through the casing and the proper distribution

of sealing material in spaces between the casing and borehole wall. At a minimum, the perforations shall extend through the intervals specified in Subsection A, above, unless otherwise approved by the enforcing agency.

Temporary conductor casing that must be left in place shall be perforated immediately before sealing operations begin to prevent drilling or well construction operations from clogging casing perforations. Once the casing has been adequately perforated, sealing material shall be placed inside the conductor casing and subjected to sufficient pressure to cause the sealing material to pass through the conductor casing perforations and completely fill any spaces or voids between the casing and borehole wall, at least within the intervals specified in Subsection A, above. Sealing material shall consist of neat cement, or bentonite prepared from powdered bentonite and water, unless otherwise approved by the enforcing agency.

Sealing material must also fill the annular space between the conductor casing and the well casing within required sealing intervals.

2. Wells drilled in unconsolidated material with significant clay layers. An 'oversized' hole, at least 4 inches greater in diameter than the outside diameter of the well casing, shall be drilled to at least the depth specified in Subsection A, page 14, above, and the annular space between the borehole wall and the well casing filled with sealing material in accordance with Subsection A, above (see Figure 4B, page 31 of Bulletin 74-81). If a significant layer of clay or clay-rich deposits of low permeability is encountered within 5 feet of the minimum seal depth prescribed in Subsection A, above, the annular seal shall be extended at least 5 feet into the clay layer. Thus, the depth of seal could be required to be extended as much as another 10 feet. If the clay layer is less than 5 feet in total thickness, the seal shall extend through its entire thickness.

   If caving material is present within the interval specified in Subsection A, a temporary conductor casing shall be installed to hold the borehole open during well drilling and placement of the casing and annular seal, in accordance with the requirements of Item 1, page 15, above. Permanent conductor casing may be used if it is installed in accordance with Item 3, below and Item 5 (page 32 of Bulletin 74-81) and it extends to at least the depth specified in Subsection A, above.

3. Wells drilled in soft consolidated formations (extensive clays, sandstones, etc.). An 'oversized' hole, at least 4 inches greater in diameter than the outside diameter of the well casing, shall be drilled to at least the depth specified in Subsection A, page 14, above. The space between the well casing and the borehole shall be filled with sealing material to at least the depth specified in Subsection A, above, as shown by Figure 4C (page 31 of Bulletin 74-81).

   If a permanent conductor casing is to be installed to facilitate the construction of the well, an oversized hole, at least 4 inches greater in diameter than the outside surface of the permanent conductor casing, shall be drilled to the bottom of the conductor casing or to at least the depth specified in Subsection A, above, and the annular space between the conductor casing and the borehole wall filled with sealing material. In some cases, such as in cable tool drilling, it may be necessary to extend permanent conductor casing beyond the depth of the required depth of the annular surface seal in order to maintain the borehole. Sealing material is not required between conductor

casing and the borehole wall other than the depths specified in Subsection A, above, and Section 13, below (page 46 of Bulletin 74-81)."

Items 4 through 7 (page 32 of Bulletin 74-81) are unchanged. Item 8 has been added, as follows:

"8. Wells that penetrate zones containing poor-quality water, pollutants, or contaminants. If geologic units or fill known or suspected to contain poor-quality water, pollutants, or contaminants are penetrated during drilling, and, the possibility exists that poor-quality water, pollutants, or contaminants could move through the borehole during drilling and well construction operations and significantly degrade ground water quality in other units before sealing material can be installed, then precautions shall be taken to seal off or 'isolate' zones containing poor-quality water, pollutants, and contaminants during drilling and well construction operations. Special precautions could include the use of temporary or permanent conductor casing, borehole liners, and specialized drilling equipment. The use of conductor casing is described in Item 1, page 15, above."

Subsection C (page 34 of Bulletin 74-81) is unchanged. Subsections D, E, and F (page 34 of Bulletin 74-81) have been changed to read as follows:

"D. Sealing Material. Sealing material shall consist of neat cement, sand cement, concrete, or bentonite. Cuttings from drilling, or drilling mud, shall not be used for any part of the sealing material.

1. Water. Water used to prepare sealing mixtures should generally be of drinking water quality, shall be compatible with the type of sealing material used, be free of petroleum and petroleum products, and be free of suspended matter. In some cases water considered nonpotable, with a maximum of 2,000 milligrams per liter chloride and 1,500 mg/l sulfate, can be used for cement-based sealing mixtures. The quality of water to be used for sealing mixtures shall be determined where unknown.

2. Cement. Cement used in sealing mixtures shall meet the requirements of American Society for Testing and Materials C150, *Standard Specification for Portland Cement*, including the latest revisions thereof.

Types of Portland cement available under ASTM C150 for general construction are:

Type I - General purpose. Similar to American Petroleum Institute Class A.

Type II - Moderate resistance to sulfate. Lower heat of hydration than Type I. Similar to API Class B.

Type III - High early strength. Reduced curing time but higher heat of hydration than Type I. Similar to API Class C.

Type IV - Extended setting time. Lower heat of hydration than Types I and III.

Type V - High sulfate resistance.

Special cement setting accelerators and retardants and other additives may be used in some cases. Special field additives for Portland cement mixtures shall meet the requirements of ASTM C494, *Standard Specification for Chemical Admixtures for Concrete*, and latest revision thereof.

Hydrated lime may be added up to 10 percent of the volume of cement used to make the seal mix more fluid. Bentonite may be added to cement-based mixes, up to 6 percent by weight of cement used, to improve fluid characteristics of the sealing mix and reduce the rate of heat generation during setting.

Dry additives should be mixed with dry cement before adding water to the mixture to ensure proper mixing, uniformity of hydration, and an effective and homogeneous seal. The water demand of additives shall be taken into account when water is added to the mix.

Minimum times required for sealing materials containing Portland cement to set and begin curing before construction operations on a well can be resumed are:

- Types I and II cement - 24 hours
- Type III cement - 12 hours
- Type V cement - 6 hours

Type IV cement is seldom used for annular seals because of its extended setting time.

Allowable setting times may be reduced or lengthened by use of accelerators or retardants specifically designed to modify setting time, at the approval of the enforcing agency.

More time shall be required for cement-based seals to cure to allow greater strength when construction or development operations following the placement of the seal may subject casing and sealing materials to significant stress. Subjecting a well to significant stress before a cement-based sealing material has adequately cured can damage the seal and prevent proper bonding of cement-based sealants to casing(s).

If plastic well casing is used, care shall be exercised to control the heat of hydration generated during the setting and curing of cement in an annular seal. Heat can cause plastic casing to weaken and collapse. Heat generation is a special concern if thin-wall plastic well casing is used, if the well casing will be subject to significant net external pressure before the setting of the seal, and/or if the radial thickness of the annular seal is large. Additives that accelerate cement setting also tend to increase the rate of heat generation during setting and, thus, should be used with caution where plastic casing is employed.

The temperature of a setting cement seal can be lowered by circulating water inside the well casing and/or by adding bentonite to the cement mixture, up to 6 percent by weight of cement used.

Cement-based sealing material shall be constituted as follows:

a. Neat Cement. For Types I or II Portland cement, neat cement shall be mixed at a ratio of one 94-pound sack of Portland cement to 5 to 6 gallons of 'clean' water. Additional water may be required where special additives, such as bentonite, or 'accelerators' or 'retardants' are used.

b. Sand Cement. Sand-cement shall be mixed at a ratio of not more than 188 pounds of sand to one 94-pound sack of Portland cement (2 parts sand to 1 part cement, by weight) and about 7 gallons of clean water, where Type I or Type II Portland cement is used. This is equivalent to a '10.3 sack mix.' Less

water shall be used if less sand than 2 parts sand per one part cement by weight is used. Additional water may be required when special additives, such as bentonite, or 'accelerators' or 'retardants' are used.

c. Concrete. Concrete is often useful for large volume annular seals, such as in large-diameter wells. The proper use of aggregate can decrease the permeability of the annular seal, reduce shrinkage, and reduce the heat of hydration generated by the seal.

Concrete shall consist of Portland cement and aggregate mixed at a ratio of at least six-94 pound sacks of Portland cement per cubic yard of aggregate. A popular concrete mix consists of eight-94 pound sacks of Type I or Type II Portland cement per cubic yard of uniform 3/8-inch aggregate.

In no case shall the size of the aggregate be more than 1/5 the radial thickness of the annular seal. Water shall be added to concrete mixes to attain proper consistency for placement, setting, and curing.

d. Mixing. Cement-based sealing materials shall be mixed thoroughly to provide uniformity and ensure that no 'lumps' exist.

Ratios of the components of cement-based sealing materials can be varied depending on the type of cement and additives used. Variations must be approved by the enforcing agency.

3. Bentonite. Bentonite clay in 'gel' form has some of the advantages of cement-based sealing material. A disadvantage is that the clay can sometimes separate from the clay-water mixture.

Although many types of clay mixtures are available, none has sealing properties comparable to bentonite clay. Bentonite expands significantly in volume when hydrated. Only bentonite clay is an acceptable clay for annular seals.

Unamended bentonite clay seals should not be used where structural strength of the seal is required, or where it will dry. Bentonite seals may have a tendency to dry, shrink and crack in arid and semi-arid areas of California where subsurface moisture levels can be low. Bentonite clay seals can be adversely affected by subsurface chemical conditions, as can cement-based materials.

Bentonite clay shall not be used as a sealing material if roots from trees and other deep rooted plants might invade and disrupt the seal, and/or damage the well casing. Roots may grow in an interval containing a bentonite seal depending on surrounding soil conditions and vegetation.

Bentonite-based sealing material shall not be used for sealing intervals of fractured rock or sealing intervals of highly unstable, unconsolidated material that could collapse and displace the sealing material, unless otherwise approved by the enforcing agency. Bentonite clay shall not be used as a sealing material where flowing water might erode it.

Bentonite clay products used for sealing material must be specifically prepared for such use. Used drilling mud and/or cuttings from drilling shall not be used in sealing material.

Bentonite used for annular seals shall be commercially prepared, powdered, granulated, pelletized, or chipped/crushed sodium montmorillonite clay. The largest dimension of pellets or chips shall be less than 1/5 the radial thickness of the annular space into which they are placed.

Bentonite clay mixtures shall be thoroughly mixed with clean water ***prior to placement***. A sufficient amount of water shall be added to bentonite to allow proper hydration. Depending on the bentonite sealing mixture used, 1 gallon of water should be added to about every 2 pounds of bentonite. Water added to bentonite for hydration shall be of suitable quality and free of pollutants and contaminants.

Bentonite preparations normally require 1/2 to 1 hour to adequately hydrate. Actual hydration time is a function of site conditions and the form of bentonite used. Finely divided forms of bentonite generally require less time for hydration, if properly mixed.

Dry bentonite pellets or chips may be placed directly into the annular space below water, where a short section of annular space, up to 10 feet in length, is to be sealed. Care shall be taken to prevent bridging during the placement of bentonite seal material.

E. Radial Thickness of Seal. A minimum of two inches of sealing material shall be maintained between all casings and the borehole wall, within the interval to be sealed, except where temporary conductor casing cannot be removed, as noted in Subsection B, page 15, above. A minimum of two inches of sealing material shall also be maintained between each casing, such as permanent conductor casing, well casing, gravel fill pipes, etc., in a borehole within the interval to be sealed, unless otherwise approved by the enforcing agency. Additional space shall be provided, where needed, for casings to be properly centralized and spaced and allow the use of a tremie pipe during well construction (if required), especially for deeper wells.

F. Placement of Seal.

Obstructions. All loose cuttings, or other obstructions to sealing shall be removed from the annular space before placement of the annular seal.

2. Centralizers. Well casing shall be equipped with centering guides or 'centralizers' to ensure the 2-inch minimum radial thickness of the annular seal is at least maintained. Centralizers need not be used in cases where the well casing is centered in the borehole during well construction by use of removable tools, such as hollow-stem augers.

The spacing of centralizers is normally dictated by the casing materials used, the orientation and straightness of the borehole, and the method used to install the casing.

Centralizers shall be metal, plastic, or other non-degradable material. Wood shall not be used as a centralizer material. Centralizers must be positioned to allow the proper placement of sealing material around casing within the interval to be sealed.

Any metallic component of a centralizer used with metallic casing shall consist of the same material as the casing. Metallic centralizer components shall meet the same metallurgical specifications and standards as the metallic casing to reduce the potential for galvanic corrosion of the casing.

3. Foundation and Transition Seals. A packer or similar retaining device, or a small quantity of sealant that is allowed to set, can be placed at the bottom of the interval to be sealed before final sealing operations begin to form a foundation for the seal.

A transition seal, up to 5 feet in length, consisting of bentonite, is sometimes placed in the annular space to separate filter pack and cement-based sealing materials. The transition seal can prevent cement-based sealing materials from infiltrating the filter pack. A short interval of fine-grained sand, usually less than 2 feet in length, is sometimes placed between the filter pack and the bentonite transition seal to prevent bentonite from entering the filter pack. Also, fine sand is sometimes used in place of bentonite as the transition seal material.

Fine-sized forms of bentonite, such as granules and powder, are usually employed for transition seals if a transition seal is to be placed above the water level in a well boring. Coarse forms of bentonite, such as pellets and chips, are often used where a bentonite transition seal is to be placed below the water level.

Transition seals should be installed by use of a tremie pipe, or equivalent. However, some forms of bentonite may tend to bridge or clog in a tremie pipe.

Bentonite can be placed in dry form or as slurry for use in transition seals. Water should be added to the bentonite transition seal prior to the placement of cement-based sealing materials where bentonite is dry in the borehole. Care should be exercised during the addition of water to the borehole to prevent displacing the bentonite.

Water should be added to bentonite at a ratio of about 1 gallon for every 2 pounds of bentonite to allow for proper hydration. Water added to bentonite for hydration shall be of suitable quality and free of pollutants and contaminants.

Sufficient time should be allowed for bentonite transition seals to properly hydrate before cement-based sealing materials are placed. Normally, 1/2 to 1 hour is required for proper hydration to occur. Actual time of hydration is a function of site conditions.

The top of the transition seal shall be sounded to ensure that no bridging has occurred during placement.

4. Timing and Method of Placement. The annular space shall be sealed as soon as practical after completion of drilling or a stage of drilling. In no case shall the annular space be left unsealed longer than 14 days following the installation of casing.

Sealing material shall be placed in one continuous operation from the bottom of the interval to be sealed, to the top of the interval. Where the seal is more than 100 feet in length, the deepest portion of the seal may be installed first and allowed to set or partially set. The deep initial seal shall be no longer than 10 feet in length. The remainder of the seal shall be placed above the initial segment in one continuous operation.

Sealing material shall be placed by methods (such as the use of a tremie pipe or equivalent) that prevent freefall, bridging, or dilution of the sealing material, or separation of sand or aggregate from the sealing material. Annular sealing materials

shall not be installed by freefall unless the interval to be sealed is dry and no deeper than 30 feet below ground surface.

5. Ground Water Flow. Special care shall be used to restrict the flow of ground water into a well boring while placing material, where subsurface pressure causing the flow of water is significant.

6. Verification. It shall be verified that the volume of sealing material placed at least equals or exceeds the volume to be sealed.

7. Pressure. Pressure required for placement of sealing materials shall be maintained long enough for cement-based sealing materials to properly set."

Section 10. Surface Construction Features.

Subsection A, Item 5; Subsection B; and Subsection F (page 39 of Bulletin 74-81) have been changed. The remainder of Section 10 (page 36 of Bulletin 74-81) is unchanged.

"A. Openings.

5. Bases. A concrete base or pad, sometimes called a pump block or pump pedestal, shall be constructed at ground surface around the top of the well casing and contact the annular seal, unless the top of the casing is below ground surface, as provided by Subsection B, page 23, below.

The base shall be free of cracks, voids, or other significant defects likely to prevent water tightness. Contacts between the base and the annular seal, and the base and the well casing, must be water tight and must not cause the failure of the annular seal or well casing. Where cement-based annular sealing material is used, the concrete base shall be poured before the annular seal has set, unless otherwise approved by the enforcing agency.

The upper surface of the base shall slope away from the well casing. The base shall extend at least two feet laterally in all directions from the outside of the well boring, unless otherwise approved by the enforcing agency. The base shall be a minimum of 4 inches thick.

A minimum base thickness of 4 inches is normally acceptable for small diameter, single-user domestic wells. The base thickness should be increased for larger wells. Shape and design requirements for well pump bases vary with the size, weight, and type of pumping equipment to be installed, engineering properties of the soil on which the base is to be placed, and local environmental conditions. A large variety of base designs have been used. The Vertical Turbine Pump Association has developed a standard base design for large lineshaft turbine pumps. This design consists of a square, concrete pump base whose design is dependent on bearing weight and site soil characteristics.

Where freezing conditions require the use of a pitless adapter, and the well casing and annular seal do not extend above ground surface or into a pit or vault, a concrete base or pad shall be constructed as a permanent location monument for the covered well. The base shall be 3 feet in length on each side and 4 inches in thickness, unless

otherwise approved by the enforcing agency. The base shall have a lift-out section, or equivalent, to allow access to the well. The lift-out shall facilitate inspection and repair of the well.

B. Well Pits or Vaults. The use of well pits, vaults, or equivalent features to house the top of a well casing below ground surface shall be avoided, if possible, because of their susceptibility to the entrance of poor-quality water, contaminants and pollutants. Well pits or vaults can only be used if approval is obtained from the enforcing agency. A substitute device, such as a pitless adapter or pitless adapter unit (a variation), should almost always be used in place of a vault or pit.

Pitless adapters and units were developed for use in areas where prolonged freezing occurs, and below ground (frost line) discharges are common. Both the National Sanitation Foundation and Water Systems Council have developed standards for the manufacture and installation of pitless adapters and units. (See Appendix E, Bibliography, page 85 of Bulletin 74-81.)

If a pit or vault is used it shall be watertight and structurally sound. The vault shall extend from the top of the annular seal to at least ground surface.

The vault shall contact the annular seal in a manner to form a watertight and structurally sound connection. Contacts between the vault and the annular seal, and the vault and the well casing, if any, shall not fail or cause the failure of the well casing or annular seal.

Where cement-based annular seal materials are used, the vault shall be set into or contact the annular seal material before it sets, unless otherwise approved by the enforcing agency. If bentonite-based sealing material is used for the annular seal, the vault should be set into the bentonite before it is fully hydrated.

Cement-based sealing material shall be placed between the outer walls of the vault and the excavation into which it is placed to form a proper, structurally sound foundation for the vault, and to seal the space between the vault and excavation.

The sealing material surrounding a vault shall extend from the top of the annular seal to ground surface unless precluded in areas of freezing. If cement-based sealing material is used for both the annular seal and the space between the excavation and vault, the sealing material shall be emplaced in a 'continuous pour'. In other words, cement-based sealing material shall be placed between the vault and excavation and contact the cement-based annular seal before the annular seal has set.

The vault cover or lid shall be watertight but shall allow the venting of gases. The lid shall be fitted with a security device to prevent unauthorized access. The outside of the lid shall be clearly and permanently labeled 'WATER WELL'. The vault and its lid shall be strong enough to support vehicular traffic where such traffic might occur.

The top of the vault shall be set at, or above, grade so that drainage is away from the vault. The top of the well casing contained within the vault shall be covered in accordance with requirements under Subsection A, above, (page 36, Bulletin 74-81) so that water, contaminants, and pollutants that may enter the vault will not enter the well casing. The cover shall be provided with a pressure relief or venting device for gases.

F. Backflow Prevention. All pump discharge pipes not discharging or open to the atmosphere shall be equipped with an automatic device to prevent backflow and/or back siphonage into a well. Specific backflow prevention measures are required for drinking water supply wells, as prescribed in Title 17, Public Health, California Code of Regulations (Sections 7583-7585 and 7601-7605, effective June 25, 1987).

Irrigation well systems, including those used for landscape irrigation, and other well systems that employ, or which have been modified to employ, chemical feeders or injectors shall be equipped with a backflow prevention device(s) approved by the enforcing agency."

Section 12. Casing.

Items 3, 5, and 6 of Subsection A (page 43 of Bulletin 74-81) have been revised. The remainder of Subsection A is unchanged. Subsection B (page 45 of Bulletin 74-81) has been revised. The revisions are as follows:

"A. Casing Material.

3. Plastic. Two basic types of plastic are commonly used for plastic well casing: thermoplastics and thermosets. **Thermoplastics** soften with the application of heat and reharden when cooled. Thermoplastics can be reformed repeatedly using heat and sometimes can unexpectedly deform. Attention should be given to the effect of heat on thermoplastic casing from the setting and curing of cement. Additional discussion on sealing material and heat generation is in Section 9, Subsection D, 'Sealing Material'.

Thermoplastics used for well casing include ABS (acrylonitrile butadiene styrene), PVC (polyvinyl chloride), and SR (styrene rubber). PVC is the most frequently used thermoplastic well casing in California. Styrene rubber is seldom used.

Unlike thermoplastics, **thermoset** plastics cannot be reformed after heating. The molecules of thermoset plastic are 'set' during manufacturing by heat, chemical action, or a combination of both. The thermoset plastic most commonly used for well casing is fiberglass.

Thermoplastics. Thermoplastic well casing shall meet the requirements of ASTM F480, *Standard Specification for Thermoplastic Well Casing Pipe and Couplings Made in Standard Dimension Ratios (SDR), SCH 40 and SCH 80*, including the latest revision thereof. (*Note*: A 'dimension ratio' is the ratio of pipe diameter to pipe wall thickness.)

Pipe made in Schedule 40 and 80 wall thicknesses and pipe designated according to certain pressure classifications are listed in ASTM F480, as well as casing specials referencing the following ASTM specifications:

(1) ABS Pipe. ASTM D1527, *Standard Specification for Acrylonitrile-Butadiene-Styrene (ABS) Plastic Pipe, Schedules 40 and 80.*

(2) PVC Pipe. ASTM D1785, *Standard Specification for (Poly Vinyl Chloride) (PVC) Plastic Pipe, Schedules 40, 80, and 120.*

(3) Pressure-Rated PVC Pipe. ASTM D2241, *Standard Specifications for Poly (Vinyl Chloride) (PVC) Pressure-Rated Pipe (SDR Series).*

Thermoplastic well casing that may be subject to significant impact stress during or after installation shall meet or exceed the requirements for impact resistance classification set forth in Section 6.5 of ASTM F480. Casing that may be subject to significant impact forces includes, but is not limited to; casing that is installed in large diameter, deep boreholes; and casing through which drilling tools pass following installation of the casing in a borehole.

b. Thermoset Plastics. Thermoset casing material shall meet the following specifications, as applicable, including the latest revisions thereof:

(1) Filament Wound Resin Pipe. ASTM D2996, *Standard Specification for Filament Wound Reinforced Thermosetting Resin Pipe.*

(2) Centrifugally Cast Resin Pipe. ASTM D2997, *Standard Specification for Centrifugally Cast Reinforced Thermosetting Resin Pipe.*

(3) Reinforced Plastic Mortar Pressure Pipe. ASTM D3517, *Standard Specification for Reinforced Plastic Mortar Pressure Pipe.*

(4) Glass Fiber Reinforced Resin Pressure Pipe. AWWA[1] C950, *AWWA Standard for Glass-Fiber-Reinforced Thermosetting-Resin Pressure Pipe.*

c. Drinking Water Supply. All plastic casing used for drinking water supply wells, including community supply well and individual domestic wells, shall meet the provisions of National Sanitation Foundation Standard No. 14, *Plastic Piping Components and Related Materials* and any revision thereof. The casing shall be marked or labeled following requirements in NSF Standard No. 14. Standard No. 14 includes the requirements of ASTM F480.

d. Storage, Handling, and Transportation. Plastic casing shall not be stored in direct sunlight or subjected to freezing temperatures for extended periods of time. Plastic casing shall be stored, handled, and transported in a manner that prevents excessive mechanical stress. Casing shall be protected from sagging and bending, severe impacts and loads, and potentially harmful chemicals.

e. Large Diameter Wells. Because large diameter plastic casing has not been used extensively at depths exceeding 500 feet, special care shall be exercised with its use in deep wells.

5. Unacceptable Casing Materials. Galvanized sheet metal pipe such as 'downspout,' tile pipe, or natural wood shall not be used as well casing.

6. Other Materials. Materials in addition to those described above may be used as well casing, subject to enforcing agency approval."

Subsection B (page 45 of Bulletin 74-81) has been revised as follows:

"B. Casing Installation. All well casing shall be assembled and installed with sufficient care to prevent damage to casing sections and joints. All casing joints above intervals of perforations

[1] American Water Works Association.

or screen shall be watertight. Any perforations shall be below the depths specified in Section 9, Subsection A, page 14, above.

Casing shall be equipped with centering guides or 'centralizers' to ensure the even radial thickness of the annular seal and filter pack.

1. Metallic Casing. Metallic casing may be joined by welds, threads, or threaded couplings. Welding shall be accomplished in accordance with the standards of the American Welding Society or the most recent revision of the American Society of Mechanical Engineers Boiler Construction Code. Metallic casing shall be equipped with a 'drive shoe' at the lower end if it is driven into place.

2. Plastic Casing. Plastic casing may be joined by solvent welding or mechanically joined by threads or other means, depending on the type of material and its fabrication. Solvent cement used for solvent welding shall meet specifications for the type of plastic casing used. Solvent cement shall be applied in accordance with solvent and casing manufacturer instructions. Particular attention shall be given to instructions pertaining to required setting time for joints to develop strength.

   The following specifications for solvent cements and joints for PVC casing shall be met, including the latest revisions thereof:

   a. ASTM D2564, *Standard Specification for Solvent Cements for Poly (Vinyl Chloride) (PVC) Plastic Pipe and Fittings.*

   b. ASTM D2855, *Standard Practice for Making Solvent-Cemented Joints with Poly (Vinyl Chloride) (PVC) Pipe and Fittings.*

   Plastic casing or screen shall not be subjected to excessive stress during installation and shall not be driven into place. Care shall be taken to ensure that plastic casing and joints are not subjected to excessive heat from cement-based sealing material.

   A specifically designed adapter shall be used to join plastic casing to metallic casing or screen."

Section 14. Well Development.

Section 14 (page 46 of Bulletin 74-81) has been revised as follows:

"Development, redevelopment, or reconditioning of a well shall be performed with care, by methods that will not damage the well structure or destroy natural barriers to the movement of poor quality water, pollutants, and contaminants.

Acceptable well development, redevelopment, or reconditioning methods include:

- Overpumping;
- Surging or swabbing by use of 'plungers';
- Surging with compressed air;
- Backwashing or surging by alternately starting and stopping a pump;
- Jetting with water;

- Introducing specifically-formulated chemicals into a well; and,
- Combinations of the above.

Hydraulic fracturing (hydrofracturing) is sometimes an acceptable well development and redevelopment method when properly performed. Good quality water shall be used in hydrofracturing. The water shall be disinfected prior to introduction into a well. Material used as 'propping' agents shall be free of pollutants and contaminants, shall be compatible with the use of a well, and shall be thoroughly washed and disinfected prior to placement in a well.

Development, redevelopment, or reconditioning by use of specially designed **explosive charges** is in some cases, another acceptable development method. Explosives shall be used with special care to prevent damage to the well structure and to any natural barriers to the movement of poor-quality water, pollutants, and contaminants. Explosives shall only be used by properly-trained personnel.

Wells subjected to chemicals or explosives during development, redevelopment, or reconditioning operations shall be thoroughly pumped to remove such agents and residues immediately after the completion of operations. Chemicals, water, and other wastes removed from the well shall be disposed of in accordance with applicable local, State, and federal requirements. The enforcing agency should be contacted regarding the proper disposal of waste."

Part III. Destruction of Wells

Section 21. Definition of "Abandoned" Well.

Section 21 (page 52 of Bulletin 74-81) has been revised as follows:

"A well is considered 'abandoned' or permanently inactive if it has not been used for one year, unless the owner demonstrates intention to use the well again. In accordance with Section 24400 of the California Health and Safety Code, the well owner shall properly maintain an inactive well as evidence of intention for future use in such a way that the following requirements are met:

"(1) The well shall not allow impairment of the quality of water within the well and ground water encountered by the well.

(2) The top of the well or well casing shall be provided with a cover, that is secured by a lock or by other means to prevent its removal without the use of equipment or tools, to prevent unauthorized access, to prevent a safety hazard to humans and animals, and to prevent illegal disposal of wastes in the well. The cover shall be watertight where the top of the well casing or other surface openings to the well are below ground level, such as in a vault or below known levels of flooding. The cover shall be watertight if the well is inactive for more than five consecutive years. A pump motor, angle drive, or other surface feature of a well, when in compliance with the above provisions, shall suffice as a cover.

(3) The well shall be marked so as to be easily visible and located, and labeled so as to be easily identified as a well.

(4) The area surrounding the well shall be kept clear of brush, debris, and waste materials."

If a pump has been temporarily removed for repair or replacement, the well shall not be considered 'abandoned' if the above conditions are met. The well shall be adequately covered to prevent injury to people and animals and to prevent the entrance of foreign material, surface water, pollutants, or contaminants into the well during the pump repair period."

Section 23. Requirements for Destroying Wells.

Subsection A, Item 1 (page 53 of Bulletin 74-81) and Subsection B, Item 1, (page 54, of Bulletin 74-81) have been changed. The remainder of Section 23 is unchanged.

Subsection A, Item 1 has been revised as follows:

"1. Obstructions. The well shall be cleaned, as needed, so that all undesirable materials, including obstructions to filling and sealing, debris, oil from oil-lubricated pumps, or pollutants and contaminants that could interfere with well destruction are removed for disposal.

The enforcing agency shall be notified as soon as possible if pollutants and contaminants are known or suspected to be in a well to be destroyed. Well destruction operations may then proceed only at the approval of the enforcing agency.

The enforcing agency should be contacted to determine requirements for proper disposal of materials removed from a well to be destroyed."

Subsection B, Item 1 has been revised as follows:

"1. Wells situated in unconsolidated material in an unconfined ground water zone. In all cases the upper 20 feet of the well shall be sealed with suitable sealing material and the remainder of the well shall be filled with suitable fill, or sealing material. (See Figure 9A, page 55 of Bulletin 74-81.)"

MONITORING WELLS

MONITORING WELL STANDARDS

INTRODUCTION

Ground water monitoring wells are principally used for observing ground water levels and flow conditions, obtaining samples for determining ground water quality, and for evaluating hydraulic properties of water-bearing strata. Monitoring wells are sometimes referred to as "observation wells."

The quality of water intercepted by a monitoring well can range from drinking water to highly polluted water. In contrast, production or "water wells" are usually designed to obtain water from productive zones containing good-quality water.

The screen or perforated section of a monitoring well usually extends only a short length to obtain water from, or to monitor conditions within, an individual water-bearing unit or zone. Water wells are often designed to obtain water from multiple water-bearing strata. Although there are usually differences between the design and function of monitoring wells and water wells, water wells sometimes are used as monitoring wells, and vice versa.

Monitoring wells, along with other types of wells, can provide a pathway for the movement of poor-quality water, pollutants, and contaminants. Because monitoring wells are often purposely located in areas affected by pollutants and contaminants, they pose an especially significant threat to ground water quality if they are not properly constructed, altered, maintained, and destroyed.

The California Legislature amended the California Water Code in 1986 specifically to include requirements for monitoring well standards. Monitoring wells were previously assumed by the Department to be covered by the collective term "well" in the law.

History of Monitoring Wells

Monitoring wells were first used mainly for water level measurement. These wells were often referred to as piezometers in reference to the "piezometric surface" of ground water. In recent years, the term "piezometric surface" is often replaced by "potentiometric surface." However, the term "piezometer" is still sometimes used for monitoring wells installed only for water level measurement.

Many water level monitoring wells constructed in the past were relatively large in diameter in comparison to today's monitoring wells. Wells up to 10-inches in diameter were often constructed to accommodate various means of water level measurement, including floats for mechanically-operated, continuous water level recorders. Many inactive water wells that could accommodate mechanical water level recording equipment were used as monitoring wells.

Modern electronic water level measuring and recording devices now allow for small-diameter water-level monitoring wells. Some continuous water-level measurement devices can be used in wells less than 2-inches in inside diameter.

The use of monitoring wells for ground water sampling for chemical analysis has increased significantly in the past two decades. The following factors have all served to increase the frequency and scope of ground water quality investigations and the number of monitoring wells constructed:

Advances in analytical and environmental chemistry;

Increased knowledge of the adverse effects of chemicals on humans;

Public awareness of ground water pollution;

The advent of federal ground water quality protection legislation in the 1970s, and,

Statutes relating to ground water quality enacted by the California Legislature.

Since the 1970s an entire industry has developed around ground water quality monitoring and monitoring well construction. Numerous private firms are involved in providing technical services for the design and implementation of ground water quality investigations. Many firms are involved in the manufacture, distribution, and marketing of materials and equipment used in constructing and operating monitoring wells.

Most monitoring wells constructed today are used to assess:

- The nature and distribution of pollutants and contaminants in ground water;
- The nature and distribution of naturally occurring chemical constituents;
- Subsurface hydrologic conditions; and,
- Hydraulic properties of strata as they relate to pollutant and contaminant movement.

Some monitoring wells are designed to be multipurpose. Monitoring wells can sometimes be used as "extraction" or "injection" wells for mitigation of pollution or contamination.

Although a significant number of monitoring wells constructed today are for detection and assessment of ground water quality impairment, many monitoring wells are constructed for evaluating ground water supply conditions by allowing ground water level measurement and/or aquifer testing. Still others are constructed for observing water levels associated with excavations and irrigated agriculture.

During 1989, approximately 20 percent of all well drilling in California was for monitoring wells, based on well driller's reports received by the Department of Water Resources. Monitoring wells have been constructed in nearly all California counties. The largest concentrations of water quality monitoring wells occur in metropolitan areas of the State. Large numbers of monitoring wells are installed for detection and assessment of leaks from underground storage tanks.

Types of Monitoring Wells

For the purpose of these standards, the term "monitoring well" is limited to wells designed to monitor subsurface water in the saturated zone, existing at or above atmospheric pressure (ground water); rather than water, water vapor, and/or gases contained in the unsaturated or vadose zone. Monitoring devices used for the unsaturated zone differ significantly from those used for the saturated (ground water) zone.

As shown in Figure 2, three basic types of monitoring wells or "installations" are:

- Individual monitoring wells;
- Nested monitoring wells; and,
- Clustered monitoring wells.

Individual monitoring wells consist of a single casing "string" within a borehole, as illustrated in Figures 2 and 3. Individual monitoring wells are installed in unique locations apart from one another. They are the most common type of monitoring well constructed in California.

Figure 2. MONITORING WELL TYPES

(NOTE: Schematic, not to scale)

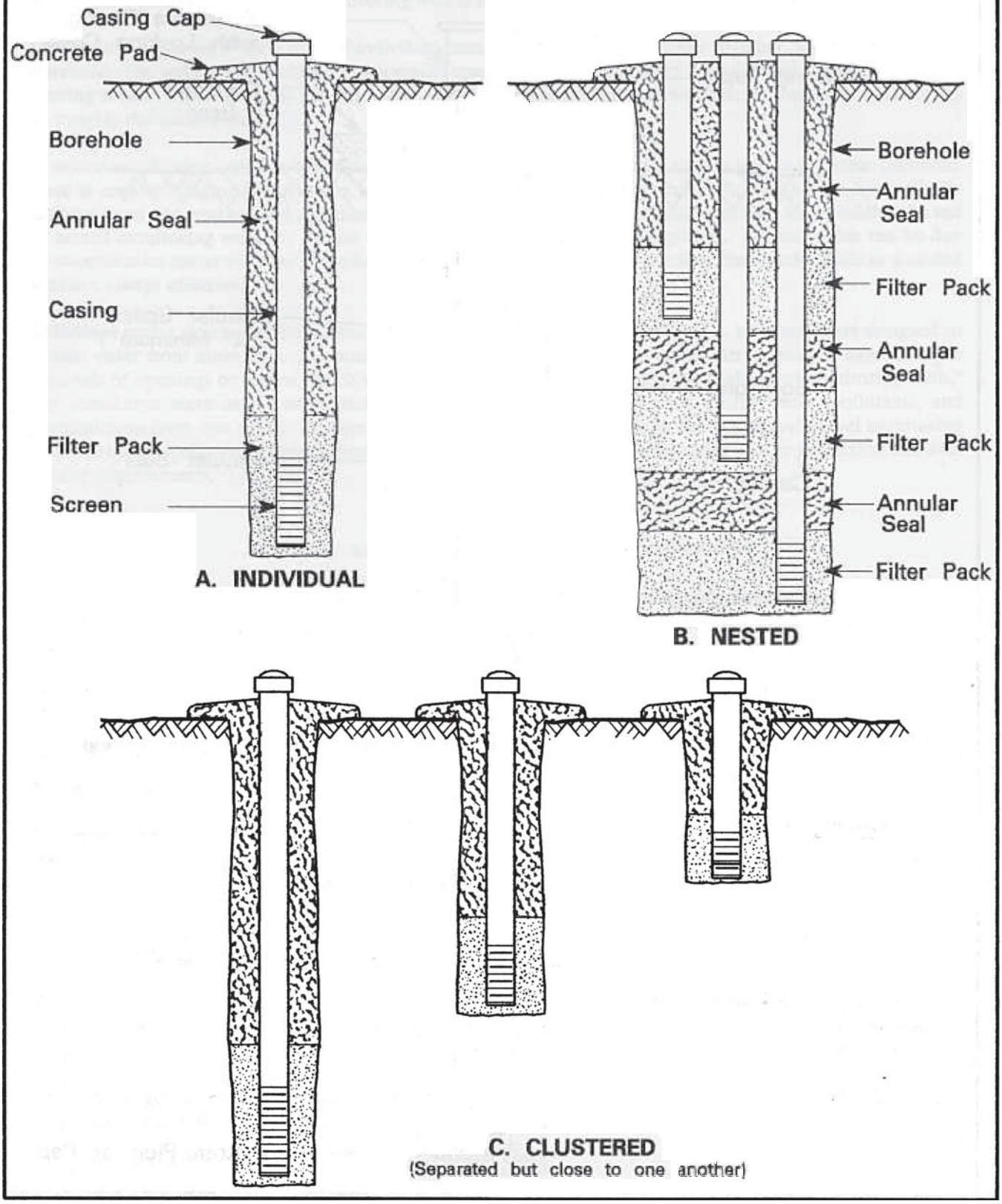

Figure 3. CROSS SECTION OF A TYPICAL MONITORING WELL

(NOTE: Schematic, not to scale)

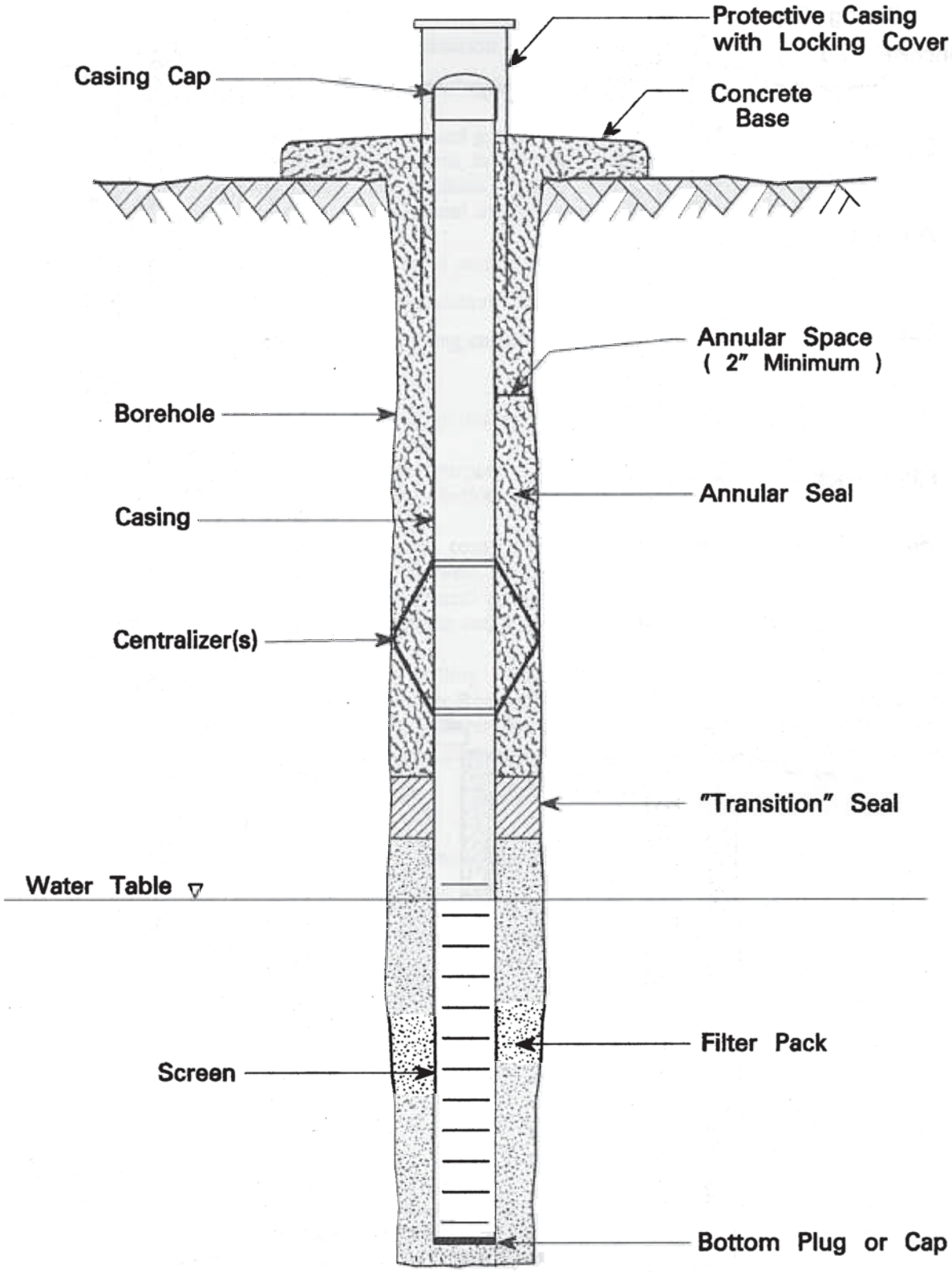

Nested monitoring wells consist of two or more casing strings within the same borehole. Normally the screened interval of each casing string is designed to obtain water from different aquifers or water-bearing zones. The purpose of a nested monitoring well is much the same as clustered monitoring wells.

Clustered monitoring wells consist of individual monitoring wells situated close together, but not in the same borehole. The wells within a cluster are normally constructed to obtain water from different aquifers or water-bearing zones. Clustered wells are most often used for monitoring ground water conditions at various depths in roughly the same area.

A nested monitoring well can be difficult to construct because of multiple casings within the same borehole. Care is required during construction to ensure water-bearing zones for each casing string are hydraulically isolated from one another and the annular seals are effective. Some regulatory agencies may prohibit the use of nested monitoring wells for certain contamination or pollution investigations. Normally this can be due to uncertainties about whether water-bearing strata can be isolated and whether the annular seals in a nested well are always effective.

Individual casing strings for the various types of monitoring wells discussed above, are sometimes designed to obtain water from more than one aquifer or water-bearing unit. These casing strings usually have multiple intervals of openings or screen. Such well casing strings, often referred to as "multi-level monitoring wells," can sometimes serve as a preferential pathway for the movement of poor quality water, pollutants, and contaminants from one unit to another. Some regulatory agencies prohibit the use of multi-level monitoring wells for certain pollution or contamination investigations out of concern for water quality protection and data quality requirements.

Authority and Responsibilities of Other Agencies

As discussed above, Congress enacted major legislation dealing with ground water quality protection during the 1970s. Regulatory programs initiated by federal legislation, such as the Resources Conservation and Recovery Act (RCRA) and its amendments, are administered by the U. S. Environmental Protection Agency. Some administration and enforcement activities related to federal legislation have been delegated to California State agencies.

The California Legislature enacted legislation expanding efforts for ground water quality protection in California beyond federal requirements. The Legislature assigned several State agencies various responsibilities for investigation, mitigation, and control of ground water pollution and contamination.

The lead enforcement agency for most ground water quality protection issues in California is the State Water Resources Control Board (State Board) and the nine California Regional Water Quality Control Boards (Regional Boards). The State Board oversees the activities of the nine regional boards.

The Department of Health Services or, under some circumstances, the U. S. Environmental Protection Agency, is the lead enforcement agency for ground water quality issues related to hazardous wastes.

The EPA, the Department of Health Services, and the State Board have adopted regulations or standards establishing monitoring requirements for "waste facilities". These regulations or standards include requirements for design and performance of monitoring wells that are often more stringent than standards in this bulletin.

Other State government organizations concerned or directly involved with ground water quality assessment or protection in California include:

- Department of Conservation, Division of Oil and Gas,

Department of Food and Agriculture,

- Integrated Waste Management Board, and,

Department of Water Resources.

California cities, counties, and local water agencies are also involved with ground water quality assessment and protection.

The Division of Oil and Gas has authority and responsibility for geothermal wells and other special wells constructed in the State's Geothermal Resources Areas (pursuant to Chapter 4, Division 3, California Public Resources Code). Shallow wells drilled for geothermal observation are subject to regulations and standards established by DOG.

After July 17, 1991 the California Environmental Protection Agency will oversee the activities of the State Water Resources Control Board and the Integrated Waste Management Board. Some of the environmental protection activities of the Department of Health Services and the Department of Food and Agriculture will also come under the California Environmental Protection Agency.

Scope, Organization, and Limitations of Standards

Certain standards that apply to water wells also apply to monitoring wells. Therefore the Monitoring Well Standards refer frequently to the Water Well Standards. Standards that apply only to monitoring wells, or that require emphasis, are discussed in detail in the Monitoring Well Standards. The Monitoring Well Standards are arranged in a format similar to the Water Well Standards.

These standards are not intended as a complete manual for monitoring well construction, alteration, maintenance, and destruction. These standards serve only as minimum statewide guidelines towards ensuring that monitoring wells do not constitute a significant pathway for the movement of poor quality water, pollutants, or contaminants. These standards provide no assurance that a monitoring well will perform a desired function. In most cases ground water monitoring practices and monitoring well performance, or functional requirements, fall under the purview of the various agencies mentioned earlier. ***Ultimate responsibility for the design and performance of a monitoring well rests with the well owner and/or the owner's contractor, and/or technical representative(s).***

STANDARDS

Part I. General

Section 1. Definitions[1].

A. Monitoring Well. The term "monitoring well" is defined in Section 13712 of the California Water Code as:

> "...any artificial excavation by any method for the purpose of monitoring fluctuations in groundwater levels, quality of underground waters, or the concentration of contaminants in underground waters."

B. Exploration Hole (or Boring). An uncased temporary excavation whose purpose is the immediate determination of hydrologic conditions at a site.

C. Enforcing Agency. An agency designated by duly authorized local, regional, or State government to administer and enforce laws or ordinances pertaining to the construction, alteration, maintenance, and destruction of monitoring wells.

Section 2. Application to Well Type.

These standards apply to all types of monitoring wells, except as prescribed in Sections 3, 4, and 5, below. Before a change in use of a well is made, any standards for the new use must be complied with.

Section 3. Exemptions for Unusual Conditions.

Under certain circumstances the enforcing agency may waive compliance with these standards and prescribe alternate requirements. These standards may be waived where they are impractical or ineffective because of unusual conditions or would result in an unsatisfactory condition or well function. In waiving any of these standards the enforcing agency shall, if at all possible, require measures be implemented to provide the same or greater level of water-quality protection that would otherwise be provided by these standards.

Section 4. Exclusions.

Most standards in Part II, "Monitoring Well Construction," page 41, do not apply to "exploration holes." However, provisions of Section 7, "Reports," below and Part III, "Destruction of Monitoring Wells," page 50, do apply directly to exploration holes.

Exploration holes for determining suitability of on-site domestic sewage disposal that are less than 10 feet in depth are exempt from the reporting and destruction requirements of these standards.

Large volume excavations for determining the suitability of on-site domestic sewage disposal, such as backhoe trenches, that exceed ten feet in depth are exempt from the requirements of Part III of these standards. However, such excavations shall be backfilled with the excavated material or other suitable fill material and the backfill compacted in lifts to attain at least 90 percent relative compaction in order to restore physical conditions in the excavation as much as possible. If a layer or layers of material that serve to impede the

[1] Selected technical terms are defined in Appendix A, page 77.

movement of poor-quality water, pollutants and contaminants are penetrated by the excavation, they shall be reestablished to the degree possible to provide protection for underground waters, unless otherwise approved by the enforcing agency. In some cases it may be necessary to backfill all or a portion of the excavation with sealing material meeting these standards to reestablish natural barriers to the movement of poor-quality water, pollutants, and contaminants.

Section 5. Special Standards.

The enforcing agency may prescribe measures more stringent than standards presented here, where needed to protect public safety or protect water quality.

Section 6. Responsible Parties.

Pursuant to Section 13750.5 (Division 7, Chapter 10, Article 3) of the California Water Code; construction, alteration, and destruction of monitoring wells shall be performed by contractors licensed in accordance with the California Contractors' License Law (Division 3, Chapter 9, California Business and Professions Code), except where exempted by law. Construction, alteration, or destruction of monitoring wells to monitor hazardous waste facilities, other waste facilities, or underground storage tanks, shall be performed under the supervision of a California Registered Professional Engineer, California Registered Geologist, or California Certified Engineering Geologist, where specified by law.

Section 7. Reports.

Monitoring well construction, alteration, and destruction reports shall be completed on forms provided by the California Department of Water Resources. Other types of forms may be used for submission to the Department with the prior approval of the Department. The completed forms shall be submitted to the Department in accordance with relevant provisions of Sections 13750 through 13754 (Division 7, Chapter 10, Article 3) of the California Water Code. Information concerning completion and submission of well construction, alteration, and destruction reports is contained in *Guide to the Preparation of the Water Well Drillers Report*, Department of Water Resources, October 1977, or its latest revision.

Part II. Monitoring Well Construction

Section 8. Well Location With Respect to Pollutants and Contaminants, and Structures.

Monitoring wells are usually constructed to observe conditions at defined or required locations. Monitoring well locations are usually selected on the basis of known or expected hydrologic, geologic, and water quality conditions and the location of pollutant or contaminant sources. Monitoring wells frequently need to be located close to or within areas of pollution or contamination.

A. Separation. Monitoring wells shall be located an adequate distance from known or potential sources of pollution and contamination, including those listed in Section 8 of the Water Well Standards, unless regulatory or legitimate data requirements necessitate they be located closer.

B. Flooding and Drainage. Monitoring wells should be located in areas protected from flooding, if possible. Provisions for locating monitoring wells in areas of flooding and drainage are contained in Section 8 of the Water Well Standards.

C. Accessibility. All monitoring wells shall be located an adequate distance from buildings and other structures to allow access for well maintenance, modification, repair, and destruction, unless otherwise approved by the enforcing agency.

D. Disposal of Wastes When Drilling in Contaminated or Polluted Areas. Drill cuttings and wastewater from monitoring wells or exploration holes in areas of known or suspected contamination or pollution shall be disposed of in accordance with all applicable federal, State, and local requirements. The enforcing agency should be contacted to determine requirements for the proper disposal of cuttings and wastewater.

Section 9. Sealing the Upper Annular Space.

The space between the monitoring well casing and the wall of the well boring, usually referred to as the "annular space," shall be effectively sealed to prevent it from being a preferential pathway for the movement of poor quality water, pollutants, and contaminants. Since monitoring wells are often constructed to obtain water from discrete intervals, a secondary purpose of the annular seal can be to isolate the well intake section or screen to one water-bearing unit. The annular seal can also serve to protect the structural integrity of the well casing and to protect the casing from chemical attack and corrosion. Because monitoring wells are often located close to, or within areas affected by pollutants and contaminants, an effective annular seal is often critical for the protection of ground water quality.

General discussion of sealing methods and requirements for monitoring wells is contained in Section 9, Section 13, and Appendix B, of the Water Well Standards. Special requirements for monitoring wells include the following:

A. Minimum Depth of Annular Seal.

1. Water quality monitoring wells and monitoring wells constructed in areas of known or suspected pollution or contamination. The annular space shall be sealed from the top of the filter pack or monitoring zone to ground surface, unless otherwise approved by the enforcing agency. The top of the filter pack or monitoring zone shall not extend into another water-bearing unit above the single water-bearing unit being monitored unless otherwise approved by the enforcing agency. The filter pack or monitoring zone shall not extend into any confining layers that overlie or underlie the unit to be moni-

tored, unless otherwise approved by the enforcing agency. The annular surface seal shall be no less than 20 feet in length.

Seal lengths less than 20 feet are permissible only if shallow zones will be monitored and approval has been obtained from the enforcing agency. If possible, special protection shall be provided where a reduced-length seal is used, as described in Section 8 of the Water Well Standards.

2. Other Monitoring Wells. The upper annular seal shall extend from ground surface to a minimum depth of 20 feet. An annular seal less than 20 feet in length is permissible if provisions in Item 1, above, are followed.

3. Sealing Off Strata. Additional annular sealing material shall be placed below the minimum depth of the upper annular seal, as is needed, to prevent the movement of poor-quality water, pollutants, and contaminants through the well to zones of good-quality water. Requirements for sealing off zones are in Section 13 of the Water Well Standards.

4. Shallow Water Level Observation Wells. Water level observation wells less than 15 feet in total depth that are used to assess root zone drainage in agricultural areas are exempt from an annular surface seal requirement, unless otherwise required by the enforcing agency.

5. Areas of Freezing. The top of the annular seal may be below ground surface in areas where freezing is likely. Such areas include those listed in Section 9 of the Water Well Standards. The top of the annular seal shall not be more than 4 feet below ground surface. The remainder of the space above the seal may be made an integral part of a vault, in accordance with Section 10, Subsection E, page 45, below.

6. Vaults. At the approval of the enforcing agency, the top of the annular seal and well casing can be below ground surface where traffic or other conditions require. In no case shall the top of the annular seal be more than 4 feet below ground surface.

   The top of the annular seal shall contact a suitable, watertight, structurally-sound subsurface vault, or equivalent feature, that encloses the top of the well casing in accordance with Section 10, Subsection E, page 45, below. The vault shall extend from the top of the annular seal to at least ground surface.

B. Sealing Conditions.

1. Temporary Conductor Casing. If "temporary" conductor casing is used during drilling, it shall be removed during the placement of the casing and annular seal materials, as described in Section 9 of the Water Well Standards. If the temporary conductor casing "cannot" be removed, as defined in Section 9 of the Water Well Standards, sealing material shall be placed between the conductor casing and borehole wall, and between the well casing and conductor casing, in accordance with methods described in Section 9 of the Water Well Standards. Sealing material shall extend to at least the depths specified in Subsection A of this section.

2. Permanent Conductor Casing. If a permanent conductor casing is to be installed, the monitoring well borehole diameter shall be at least 4 inches greater than the outside diameter of the conductor casing. The inner diameter of the permanent conductor

casing shall in turn be at least 4 inches greater than the outside diameter of the well casing.

Sealing material shall be placed between the permanent conductor casing and the borehole wall, and the conductor casing and the well casing. The sealing material shall extend to at least the depths specified in Subsection A of this section.

C. Radial Thickness of Seal. A minimum of two inches of sealing material shall be maintained between all casings and the borehole wall, within the interval to be sealed, except as noted in Section 9 of the Water Well Standards. At least two inches of sealing material shall also be maintained between all "casings" in a borehole, within the interval to be sealed unless otherwise approved by the enforcing agency. Additional space shall be provided, where needed, to allow casings to be properly centralized and spaced and allow the use of a tremie pipe during well construction (if required), especially for deeper wells.

D. Sealing Material. Sealing material shall consist of neat cement, sand-cement, or bentonite clay. Cement-based sealing material shall be used opposite fractured rock, unless otherwise approved by the enforcing agency. Concrete shall be used only with the approval of the enforcing agency.

Sealing material shall be selected based on required structural, handling, and sealing properties, and the chemical environment into which it is placed. Used drilling mud or cuttings from drilling shall not be used for any part of sealing material.

1. Water. Water used for sealing mixtures should generally be of drinking water quality, shall be compatible with the type of sealing material used, shall be free of petroleum and petroleum products, and shall be free of suspended matter. Good-quality water is necessary to ensure that sealing materials achieve proper consistency for placement and achieve adequate structural and sealing properties.

   Nonpotable water can sometimes be used for preparing cement-based sealing materials. In no case shall the concentration of chloride in water used in cement-based sealing material exceed 2,000 milligrams per liter. Sulfate shall not exceed 1,500 mg/l.

   Water used for sealing material shall be chemically analyzed if unknown. Only drinking-quality water of known composition should be used for preparing sealing mixtures for monitoring wells to be used for sensitive water-quality determinations.

2. Cement-Based Sealing Materials. Discussion and standards for cement-based sealing materials are contained in Section 9 of the Water Well Standards. Special considerations that apply to monitoring wells are:

   a. Additives. Care should be exercised in the use of special additives for cement-based sealing materials, such as those used for modifying cement setting times. Some additives could interfere with sensitive water quality determinations.

   b. Cooling Water. In the case of water quality monitoring wells, care should be exercised in the use of circulating cooling water to protect plastic casing from heat build-up during setting of cement-based sealing materials. Water introduced and/or circulated in a well for cooling could interfere with water quality determinations.

3. Bentonite-Based Sealing Materials. Discussion and standards for bentonite-based sealing materials are contained in Section 9 of the Water Well Standards.

E. Transition Seal. A bentonite-based transition seal, up to 5 feet in length, is often placed in the annular space to separate filter pack and cement-based sealing materials. The transition seal can prevent cement-based sealing materials from infiltrating the filter pack. A short interval of fine-grain sand, usually less than 2 feet in length, is often placed between the filter pack and the bentonite transition seal to prevent bentonite from entering the filter pack. Also, fine sand is sometimes used in place of bentonite as the transition seal material.

Fine-grain forms of bentonite, such as granules and powder, are usually employed for a transition seal if a transition seal is to be placed above the water level in a well boring. Coarse forms of bentonite, such as pellets and chips, are often used where a bentonite transition seal is to be placed below the water level.

Transition seals should be installed by using a tremie pipe or equivalent. However, some forms of bentonite may tend to bridge or clog in a tremie pipe.

Bentonite can be placed in the well annulus in dry form or as slurry for transition seals. Water should be added to the bentonite transition seal prior to the placement of cement-based sealing materials where the bentonite is dry in the borehole. Care should be exercised during the addition of water to the borehole to prevent displacing the bentonite.

Water should be added to bentonite at a ratio of about 1 gallon for every 2 pounds of bentonite to allow for proper hydration. Water added to bentonite for hydration or to make a slurry shall be of suitable quality and free of pollutants and contaminants.

Sufficient time should be allowed for bentonite transition seals to properly hydrate before cement-based sealing materials are placed. Normally, 1/2 to 1 hour is required for hydration to occur. Actual time of hydration is a function of site conditions.

The top of the transition seal shall be sounded to ensure that no bridging occurred during placement.

F. Placement of Annular Seal Material. All loose cuttings and other obstructions shall be removed from the annular space before sealing materials are placed. Sealing may be accomplished by using pressure grouting techniques, a tremie pipe, or equivalent. Sealing materials shall be installed as soon as possible during well construction operations. Sealing materials shall not be installed by "free-fall" from the surface unless the interval to be sealed is dry and less than 30 feet deep.

Casing spacers shall be used within the interval(s) to be sealed to separate individual well casing strings from one another in a borehole of a nested monitoring well. The spacers shall be placed at intervals along the casing to ensure a minimum separation of 2 inches between individual casing strings. Spacers shall be constructed of corrosion-resistant metal, plastic, or other non-degradable material. Wood shall not be used as spacer material.

Any metallic component of a spacer used with metallic casing shall consist of the same material as the casing. Metallic spacer components shall meet the same metallurgical specifications and standards as the casing to reduce the potential for galvanic corrosion of the casing.

The spacing of casing spacers is normally dictated by casing materials used, the orientation and straightness of the borehole, and the method used to install the casing. Spacers shall not be more than 12 inches in length and shall not be placed closer than 10 feet apart along a casing string within the interval to be sealed, unless otherwise approved by the enforcing agency.

Casing spacers shall be designed to allow the proper passage and distribution of sealing material around casing(s) within the interval(s) to be sealed.

Additional discussion and standards for placement of the annular seal are contained in Section 9, Section 13, and Appendix B of the Water Well Standards.

Section 10. Surface Construction Features.

Surface construction features of a monitoring well shall serve to prevent physical damage to the well; prevent entrance of surface water, pollutants, and contaminants; and prevent unauthorized access.

A. Locking Cover. The top of a monitoring well shall be protected by a locking cover or equivalent level of protection to prevent unauthorized access.

B. Casing Cap. The top of a monitoring well casing shall be fitted with a cap or "sanitary seal" to prevent surface water, pollutants, or contaminants from entering the well bore. Openings or passages for water level measurement, venting, pump power cables, discharge tubing, and other access shall be protected against entry of surface water, pollutants, and contaminants.

C. Flooding. The top of the well casing shall terminate above ground surface and known levels of flooding, except where site conditions, such as vehicular traffic, will not allow.

D. Bases. Unless otherwise approved by the enforcing agency, a concrete base or pad shall be constructed around the top of a monitoring well casing at ground surface and contact the annular seal, unless the top of the casing is below ground surface as provided by Subsection E, below. The base shall be at least 4 inches thick and shall slope to drain away from the well casing. The base shall extend at least two feet laterally in all directions from the outside of the well boring, unless otherwise approved by the enforcing agency.

The base shall be free of cracks, voids, and other significant defects likely to prevent water tightness. Contacts between the base and the annular seal, and the base and the well casing must be water tight and must not cause the failure of the well casing or annular seal.

Where cement-based annular sealing material is used, the concrete base shall be poured before the annular seal has set, unless otherwise approved by the enforcing agency.

E. Vaults. At the approval of the enforcing agency, the top of the well casing may be below ground surface because of traffic or other critical considerations. A structurally-sound watertight vault, or equivalent feature, shall be installed to house the top of a monitoring well that is below ground surface. The vault shall extend from the top of the annular seal to at least ground surface. In no case shall the top of the annular seal be more than 4 feet below ground surface.

The vault shall contact the annular seal in a manner to form a watertight and structurally sound connection. Contacts between the vault and the annular seal, and the vault and the well casing, if any, shall not fail or cause the failure of the well casing or annular seal.

Where cement-based annular seal materials are used, the vault shall be set into or contact the annular seal material before it sets, unless otherwise approved by the enforcing agency. If bentonite-based sealing material is used for the annular seal, the vault should be set into the bentonite before it is fully hydrated.

Cement-based sealing material shall be placed between the outer walls of the vault and the excavation into which it is placed to form a proper, structurally sound foundation for the vault, and to seal the space between the vault and excavation. Bentonite-based sealing material may be used between the vault and excavation at the approval of the enforcing agency.

Sealing material surrounding a vault shall extend from the top of the annular seal to ground surface, unless precluded in areas of freezing. If cement-based sealing material is used for both the annular seal and the space between the excavation and vault, the sealing material shall be placed in a "continuous pour." In other words, cement-based sealing material shall be placed between the vault and excavation and contact the cement-based annular seal before the annular seal has set.

The vault cover or lid shall be watertight but shall allow the venting of gases, unless otherwise approved by the enforcing agency. The lid shall be fitted with a security device to prevent unauthorized access. The lid shall be clearly and permanently marked "MONITORING WELL." The vault and its lid shall be strong enough to support vehicular traffic where such traffic might occur.

The top of the vault shall be set at or above grade so drainage is away from the vault. The top of the well casing contained within the vault shall be covered in accordance with requirements under Subsections A and B, above, so that water, contaminants, or pollutants that may enter the vault will not enter the well casing.

F. Protection From Vehicles. Protective steel posts, or the equivalent, shall be installed around a monitoring well casing where it is terminated above ground surface in areas of vehicular traffic. The posts shall be easily seen and shall protect the well from vehicular impact.

Additional requirements for surface construction features are in Section 10 of the Water Well Standards.

Section 11. Filter Pack.

Monitoring well filter pack material shall consist of nonreactive, smooth, rounded, spherical, granular material of highly uniform size and known composition. Filter pack material shall not degrade or consolidate after placement. The grain-size of the filter pack shall be matched to the slot size of the well screen so that any movement of filter pack material into the well will be limited to prevent significant voids in the filter pack that could ultimately destabilize the annular seal.

Filter pack material shall be obtained from clean sources. Filter pack material should be washed and properly packaged for handling, delivery, and storage, if used in monitoring wells constructed for sensitive water quality determinations.

Care should be exercised in the storage of filter pack materials at a drilling site to ensure the material does not come into contact with pollutants or contaminants. Care should also be exercised to prevent the introduction of foreign substances, such as clay or vegetative matter, that might interfere with the placement and function of the filter pack.

Filter pack material shall be placed in the well boring by use of a tremie pipe or equivalent. The depth of the top of the filter pack shall be carefully checked and the volume of emplaced filter pack material verified to determine that filter pack materials have not bridged during installation.

Section 12. Casing.

The term "casing" in its broadest sense includes all tubular materials that are permanent features of a well. Screens, collars, risers, liners, and blank casing in monitoring wells maintain the well bore and provide a passage for ground water level measurement and/or sample-collection devices.

Protective casing serves to prevent accidental or intentional damage to a well. Protective casing normally consists of heavy gauge metallic pipe placed over the portion of the well casing that extends above ground surface.

Conductor casing usually functions as a temporary means of shoring the walls of a well boring to allow drilling and the placement of well construction materials. If used, temporary conductor casing is usually driven into place during drilling and is withdrawn at the same time filter pack and annular seal materials are installed around the well casing. Sometimes conductor casing is left in place and is made a permanent feature of the completed well structure. Requirements for sealing permanent conductor casing in place are contained in Section 9.

For the purpose of these standards, the term "casing" applies to screens, collars, risers, and blank casing, and other specialized products used to maintain the well bore. General discussion and standards for casing materials are contained in Section 12 of the Water Well Standards. Special considerations that apply to monitoring well casing are described below:

A. Casing Material.

1. Chemical Compatibility. Special consideration shall be given to the selection of casing materials for monitoring wells installed in environments that are chemically "hostile". The selected casing shall resist chemical attack and corrosion.

   Special consideration should be given to the selection of casing materials for wells to be used for sensitive water-quality determinations. Chemical interaction between casing materials and pollutants, contaminants, ground water, filter pack material, and geologic materials could bias ground-water quality determinations.

2. Used Casing. Used casing may be acceptable in certain cases, at the approval of the enforcing agency.

3. Plastic and Steel Casing. Plastic and steel well casing materials are commonly used for monitoring wells. The principal plastics used for water-quality monitoring wells are thermoplastics and fluorocarbon resins.

   Standards for **thermoplastic** well casing are in Section 12 of the Water Well Standards. The principal thermoplastic material used for water quality monitoring wells is polyvinyl chloride (PVC).

   Fluorocarbon casing materials include fluorinated ethylene propylene (FEP) and polytetrafluoroethylene (PTFE). Fluorocarbon resin casing materials are generally considered immune to chemical attack. Fluorocarbon casing materials shall meet the following specifications, including the latest revisions thereof:

   a. ASTM D3296, *Standard Specification for FEP-Fluorocarbon Tube.*

   b. ASTM D3295, *Standard Specifications for PTFE Tubing.*

Stainless steel is the most common form of metallic casing used in monitoring wells constructed for sensitive water quality determinations. Stainless steel casing shall meet the provisions of ASTM A312, *Standard Specification for Seamless and Welded Austenitic Stainless Pipe*, and shall meet general requirements for tubular steel products in Section 12 of the Water Well Standards.

B. Multiple Screens. Monitoring well casing strings shall not have openings in multiple water-bearing units (multi-level monitoring wells), if poor-quality water, pollutants, or contaminants in units penetrated by the well could pass through the openings and move to other units penetrated by the well and degrade ground water quality, unless otherwise approved by the enforcing agency.

C. Bottom Plugs. The bottom of a monitoring well casing shall be plugged or capped to prevent sediment or rock from entering the well.

D. Casing Installation. Discussion and standards for the installation of casing materials are in Section 12 of the Water Well Standards. Special considerations for monitoring wells are:

1. Cleanliness. Casing, couplings, centralizers, and other components of well casing shall be clean and free of pollutants and contaminants at the time of installation.

2. Joining Plastic Casing. Depending on the type of material and its fabrication, plastic casing shall be joined (threaded or otherwise coupled) in a manner that ensures its water tightness. Organic solvent welding cements or glues should not be used for joining plastic casing if glues or cement compounds could interfere with water-quality determinations.

3. Impact. Casing shall not be subjected to significant impact during installation that may damage or weaken the casing.

Section 13. Well Development.

Monitoring well development, redevelopment, and reconditioning shall be performed with care so as to prevent damage to the well and any strata surrounding the well that serve to restrict the movement of poor-quality water, pollutants, and contaminants. Development, redevelopment, and reconditioning operations shall be performed with special care where a well has been constructed in an area of known or suspected pollution or contamination. Such special care is necessary to prevent the spread of pollutants and contaminants in the environment and to protect public health and safety.

Water, sediment, and other waste removed from a monitoring well for "development" operations shall be disposed of in accordance with applicable federal, State, and local requirements. The enforcing agency should be contacted concerning the proper disposal of waste from development operations.

Appropriate methods of well development vary with the type and use of a monitoring well. Development methods that may be acceptable under certain circumstances include:

A. Mechanical Surging. Plungers, bailers, surge blocks, and other surging devices shall incorporate safety valves or vents to prevent excessive pressure differentials that could damage casing or screen.

B. Overpumping and Pump Surging. Overpumping and surging may not be suitable for development of wells producing large amounts of sediment because of the potential for clogging or jamming of pumps.

C. Air Development. Some air development methods are not acceptable for monitoring wells to be used for sensitive water-quality determinations.

D. Water Jetting. Water used in jetting operations shall be free of pollutants and contaminants. Water-jetting methods are not always acceptable for monitoring wells used for sensitive water-quality determinations.

E. Chemical Development. Extreme care shall be exercised in the use of chemicals for monitoring well development. It is often unacceptable to use chemicals for developing monitoring wells to be used for water-quality determinations. Chemicals introduced for development shall be completely removed from the well, filter pack, and water-bearing strata accessed by the well immediately after development operations are completed.

The various methods described above are sometimes used in combination.

Section 14. Rehabilitation and Repair of Monitoring Wells.

For the purpose of these standards, "well rehabilitation" includes the treatment of a well to recover loss in yield caused by incrustation or clogging of the screen, filter pack, and/or water-bearing strata adjoining the well. Well rehabilitation methods that may, in certain cases, be acceptable for monitoring wells include mechanical surging, backwashing or surging by alternately starting or stopping a pump, surging with air, water jetting, sonic cleaning, chemical treatment, or combinations of these.

Rehabilitation methods shall be performed with care to prevent damage to the well and any barriers that serve to restrict the movement of poor-quality water, pollutants, or contaminants. Chemicals used for rehabilitation shall be completely removed from the well, filter pack, and water-bearing strata accessed by the well immediately after rehabilitation operations are completed. Chemicals, water, and other waste shall be disposed of in accordance with applicable federal, State, and local requirements. The enforcing agency should be contacted regarding the proper disposal of waste from rehabilitation operations.

Rehabilitation methods should be compatible with the use of the monitoring well. Special care should be given to the selection of rehabilitation methods for water-quality monitoring wells.

Materials used for repairing well casing shall meet the requirements of Section 12 of these standards.

Section 15. Temporary Cover.

The well or borehole opening and any associated excavations shall be covered at the surface to ensure public safety and to prevent the entry of foreign material, water, contaminants, and pollutants whenever work is interrupted by such events as overnight shutdown, poor weather, and required waiting periods to allow setting of sealing materials and the performance of tests. The cover shall be held in place or weighted down in such a manner that it cannot be removed except by equipment or tools.

Part III. Destruction of Monitoring Wells

Section 16. Purpose of Destruction.

A monitoring well or exploration hole subject to these requirements that is no longer useful, permanently inactive or "abandoned" must be properly destroyed to:

(1) Ensure the quality of ground water is protected, and,

(2) Eliminate a possible physical hazard to humans and animals.

Section 17. Definition of "Abandoned" Monitoring Well.

A monitoring well is considered "abandoned" or permanently inactive if it has not been used for one year, unless the owner demonstrates intention to use the well again. In some cases regulatory agencies may require that an inactive monitoring well be maintained for future use.

In accordance with Section 24400 of the California Health and Safety Code, the monitoring well owner shall properly maintain an inactive well, as evidence of intention for future use, in such a way that the following requirements are met:

"(1) The well shall not allow impairment of the quality of water within the well and ground water encountered by the well.

(2) The top of the well or well casing shall be provided with a cover, that is secured by a lock or by other means to prevent its removal without the use of equipment or tools, to prevent unauthorized access, to prevent a safety hazard to humans and animals, and to prevent illegal disposal of wastes in the well. The cover shall be watertight where the top of the well casing or other surface openings to the well are below ground level, such as in a vault or below known levels of flooding. The cover shall be watertight if the well is inactive for more than five consecutive years. A pump motor, angle drive, or other surface feature of a well, when in compliance with the above provisions, shall suffice as a cover.

(3) The well shall be marked so as to be easily visible and located, and labeled so as to be easily identified as a well.

(4) The area surrounding the well shall be kept clear of brush, debris, and waste materials."

Section 18. General Requirements.

All permanently inactive or "abandoned" monitoring wells and exploration holes subject to these requirements shall be properly destroyed. The purposes of destruction are to eliminate the well structure and borehole as a possible means for the preferential migration of poor-quality water, pollutants, and contaminants; and, to prevent a possible hazard to humans and animals.

Section 19. Requirements for Destroying Monitoring Wells and Exploration Holes.

General requirements for destroying monitoring wells and exploration holes are contained in Section 23 of the Water Well Standards. Special considerations for monitoring wells and exploration holes are as follows.

A. Monitoring Wells. Monitoring wells shall be destroyed in accordance with the following requirements and Section 23 of the Water Well Standards, **irrespective of their original date of construction.**

1. Preliminary Work. A monitoring well shall be investigated before it is destroyed to determine its condition and details of its construction. The well shall be sounded immediately before it is destroyed to make sure no obstructions exist that will interfere with filling and sealing.

   The well shall be cleaned before destruction as needed so that all undesirable materials, including obstructions to filling and sealing, debris, oil from oil-lubricated pumps, or pollutants and contaminants that could interfere with well destruction, are removed for disposal.

   The enforcing agency shall be notified as soon as possible if pollutants or contaminants are known or suspected to be present in a well to be destroyed. Well destruction operations may then proceed only at the approval of the enforcing agency. The enforcing agency should be contacted to determine requirements for proper disposal of all materials removed from a well to be destroyed.

2. Sealing Conditions. The following minimum requirements shall be followed when various conditions are encountered.

   a. The monitoring well casing, and any other significant voids within the well, shall, at a minimum, be completely filled with sealing material, if the following conditions exist:

      - **The monitoring well is located in an area of known or potential pollution or contamination, and,**
      - **The well was constructed and maintained in accordance with these standards.**

      Sealing material may have to be placed under pressure to ensure that the monitoring well is properly filled and sealed.

   b. A monitoring well shall be destroyed by removing all material within the original borehole, including the well casing, filter pack, and annular seal; and the created hole completely filled with appropriate sealing material, if the following conditions exist:

      - **The well is located in an area of known or potential pollution or contamination, and,**
      - **The well's annular seal, casing, screen, filter pack, or other components were not constructed or maintained according to these standards so that well destruction by merely filling the well casing with sealing material, as in "a" above, would not prevent potential water-quality degradation from**

the movement of poor-quality water, pollutants, or contaminants through the destroyed well structure.

Material to be extracted from the original borehole shall be removed by means of drilling, including overdrilling, if necessary. The enforcing agency should be contacted to determine requirements for proper disposal of removed materials.

Casing, filter pack, and annular seal materials may be left in place during sealing operations, if the enforcing agency agrees they cannot or should not be removed. In such a case, appropriate sealing material shall be placed in the well casing, filter pack, and all other significant voids within the entire well boring. Casing left in place may require perforation or puncturing to allow proper placement of sealing materials. Sealing material may have to be applied under pressure to ensure its proper distribution.

c. **Monitoring wells shall, at a minimum, be destroyed in accordance with the requirements of Section 23 of the Water Well Standards if located in an area free of any known or potential contamination or pollution.**

B. Exploratory Borings. Exploratory borings shall be completely filled with appropriate sealing material from bottom to top, if located in areas of known or suspected contamination or pollution. Borings located outside such areas shall, at a minimum, be filled with sealing material from ground surface to the minimum depths specified in Section 23 of the Water Well Standards. Additional sealing material shall be placed below the minimum surface seal where needed to prevent the interchange of poor-quality water, pollutants, or contaminants between strata penetrated by the boring.

Appropriate fill or sealing material shall be placed below and between intervals containing sealing material. Sealing material is often economical to use as fill material.

The boring shall be inspected immediately prior to filling and sealing operations. All obstructions and pollutants and contaminants that could interfere with filling and sealing operations shall be removed prior to filling and sealing. The enforcing agency shall be notified as soon as possible if pollutants or contaminants are known or suspected to be in a boring to be destroyed. Well destruction operations may then proceed only at the approval of the enforcing agency. The enforcing agency should be contacted to determine requirements for proper disposal of removed materials.

C. Placement of Material. The placement of sealing material for monitoring wells and exploratory borings is generally described in Section 23 and Appendix B of the Water Well Standards. The following additional requirements shall be observed when placing sealing material for monitoring well or exploratory boring destruction.

1. Placement Method. The well or exploratory boring shall be filled with appropriate sealing, and fill material where allowed, using a tremie pipe or equivalent, proceeding upward from the bottom of the well or boring.

Sealing material shall be placed by methods (such as the use of a tremie pipe or equivalent) that prevent freefall, bridging, and dilution of sealing materials, and/or prevent separation of aggregate from sealants. Sealing material may be placed by

freefall only where the interval to be sealed is dry and no more than 30 feet in depth. Fill material shall be placed by methods that prevent bridging and voids.

2. Timing of Placement. Sealing material shall be placed in one continuous operation (or "pour") from the bottom to the top of the well or boring, unless conditions in the well or boring dictate that sealing operations be conducted in a staged manner, and prior approval is obtained from the enforcing agency.

3. Ground Water Flow. Special care shall be used to restrict the flow of ground water into a well or boring while placing sealing and fill material, if subsurface pressure producing the flow is significant.

4. Sealing Pressure. Pressure required for the placement of cement-based sealing materials shall be maintained long enough for cement-based sealing materials to properly set.

5. Verification. It shall be verified that the volume of sealing and fill material placed during destruction operations equals or exceeds the volume to be filled and sealed. This is to help determine whether the well or boring has been properly destroyed and that no jamming or bridging of the fill or sealing material has occurred.

D. Sealing and Fill Materials. Materials used for sealing exploratory borings and monitoring wells shall have low permeabilities so that the volume of water and possible pollutants and contaminants passing through them will be of minimal consequence. Sealing material shall be compatible with the chemical environment into which it is placed, and shall have mechanical properties consistent with present and future site uses.

Suitable sealing materials include neat cement, sand-cement, and bentonite, all of which are described in Section 9 of these standards. Bentonite shall not be used as a sealing material opposite zones of fractured rock, unless otherwise approved by the enforcing agency. Drilling mud or drill cuttings are not acceptable as any part of sealing material for well destruction. Concrete may be used as a sealing material at the approval of the enforcing agency.

Fill material, if any, shall meet the requirements of Section 23 of the Water Well Standards. Fill material shall be free of pollutants and contaminants and shall not be subject to decomposition or consolidation after placement. Drilling mud or cuttings are not acceptable as any part of fill material.

E. Additional Requirements for Monitoring Wells and Exploratory Borings in Urban Areas. The following additional requirements shall be met for destroying monitoring wells and exploratory borings in urban areas, unless otherwise approved by the enforcing agency:

1. The upper surface of the sealing material shall end at a depth of 5 feet below ground surface; and,

2. If the well casing was not extracted during destruction and sealing operations, a hole shall be excavated around the well casing to a depth of 5 feet below ground surface after sealing operations have been completed and the sealing material has adequately set and cured. The exposed well casing shall then be removed by cutting the casing at the bottom of the excavation. The excavation shall be backfilled with clean, native soil or other suitable material.

F. Temporary Cover. The well or borehole opening and any associated excavations shall be covered at the surface to ensure public safety and to prevent the entry of foreign material, water, pollutants, and contaminants; whenever work is interrupted by such events as overnight shutdown, poor weather, and required waiting periods to allow setting of sealing materials and the performance of tests. The cover shall be held in place or weighted down in such a manner that it cannot be removed, except by equipment or tools.

CATHODIC PROTECTION WELLS

CATHODIC PROTECTION WELL STANDARDS

INTRODUCTION

Most wells in California are constructed to extract ground water, inject water, or monitor ground water conditions. Other, less common types of wells include cathodic protection wells. Cathodic protection wells, sometimes called "deep groundbeds," house devices to minimize electrolytic corrosion of metallic pipelines, tanks, and other facilities in contact with the ground.

Electrolytic Corrosion

For the purpose of these standards, electrolytic corrosion is defined as the deterioration of metallic objects by electrochemical reaction with the environment. The electrolytic corrosion process is illustrated in Figure 4 for a metallic pipeline in a soil-water environment. This process gradually weakens the pipeline and can cause its failure.

In Figure 4, an electric potential is induced on the surface of the pipeline as a result of variations in the concentrations of salts in the soil and water surrounding the pipeline. This potential results in an electric current in the soil-water electrolyte. Current flows from an "anode area" on the pipeline to a "cathode area" on the pipeline. Metal is removed from the anode area by the current.

Cathodic Protection

"Cathodic protection" is a term used for certain measures taken to prevent or minimize electrolytic corrosion of metallic equipment and structures. Cathodic protection devices redirect current to flow from a "sacrificial" anode to the soil-water electrolyte, instead of from an anode area on a pipeline or other metallic structure to be protected. The protective anode's role is to corrode in place of the metallic object it is designed to protect, as shown in Figure 5. The protected facility is made to be a permanent cathode by use of cathodic protection devices. Thus, the facility is said to be "cathodically protected."

Protective or sacrificial anodes can be placed close to ground surface or at significant depth. Anodes have been placed at shallow depths in horizontal and vertical arrays for many years. Shallow arrays are often not well suited for metropolitan areas because of land requirements, or suited for areas where electrical interference may be high.

Deep vertical anode installations, usually referred to as "cathodic protection wells," were first developed and used during the 1940s. They were developed in response to the constraints of shallow anode arrays.

Cathodic Protection Wells

Cathodic protection wells are widely installed to protect metallic objects in contact with the ground from electrolytic corrosion. Such objects include petroleum, natural gas, and water pipelines, and related storage facilities; power lines; telephone cables; and switchyards. Cathodic protection wells are sometimes used to control electrolytic corrosion in large water wells.

Figure 4. ELECTROLYTIC CORROSION OF A BURIED PIPELINE

(NOTE: Schematic, not to scale)

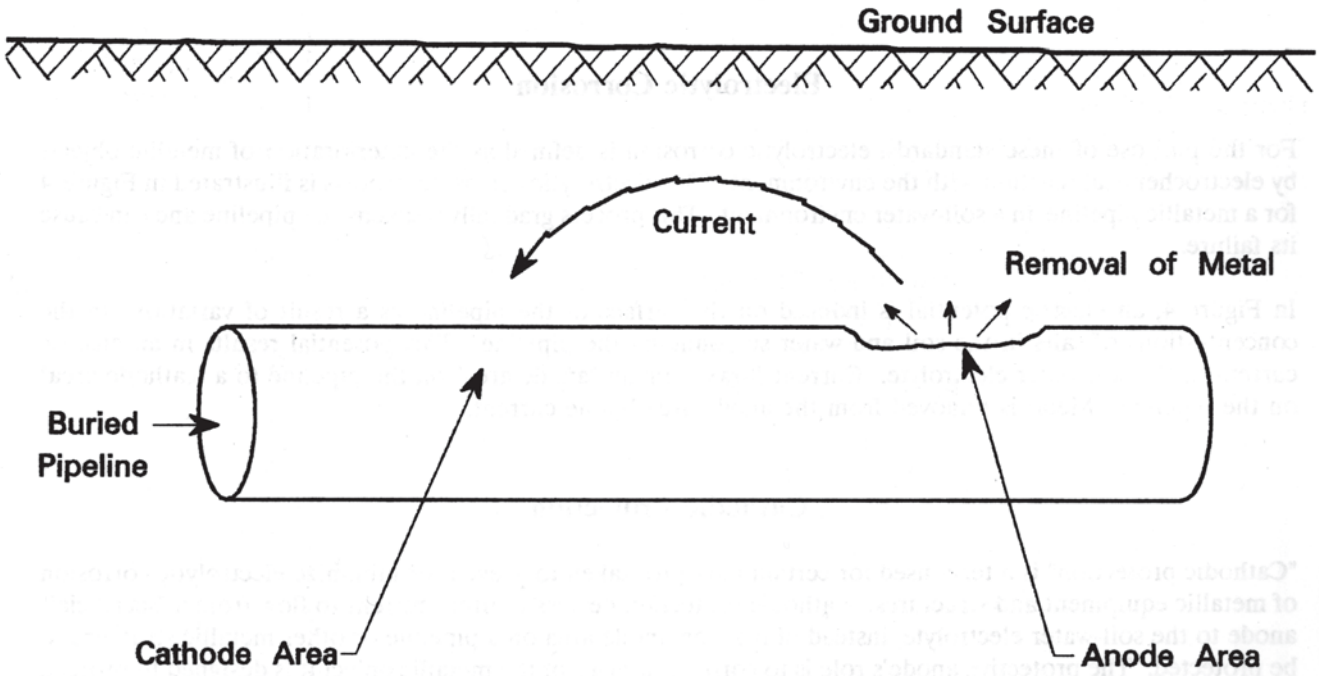

Figure 5. CATHODIC PROTECTION OF A BURIED PIPILINE

(NOTE: Schematic, not to scale)

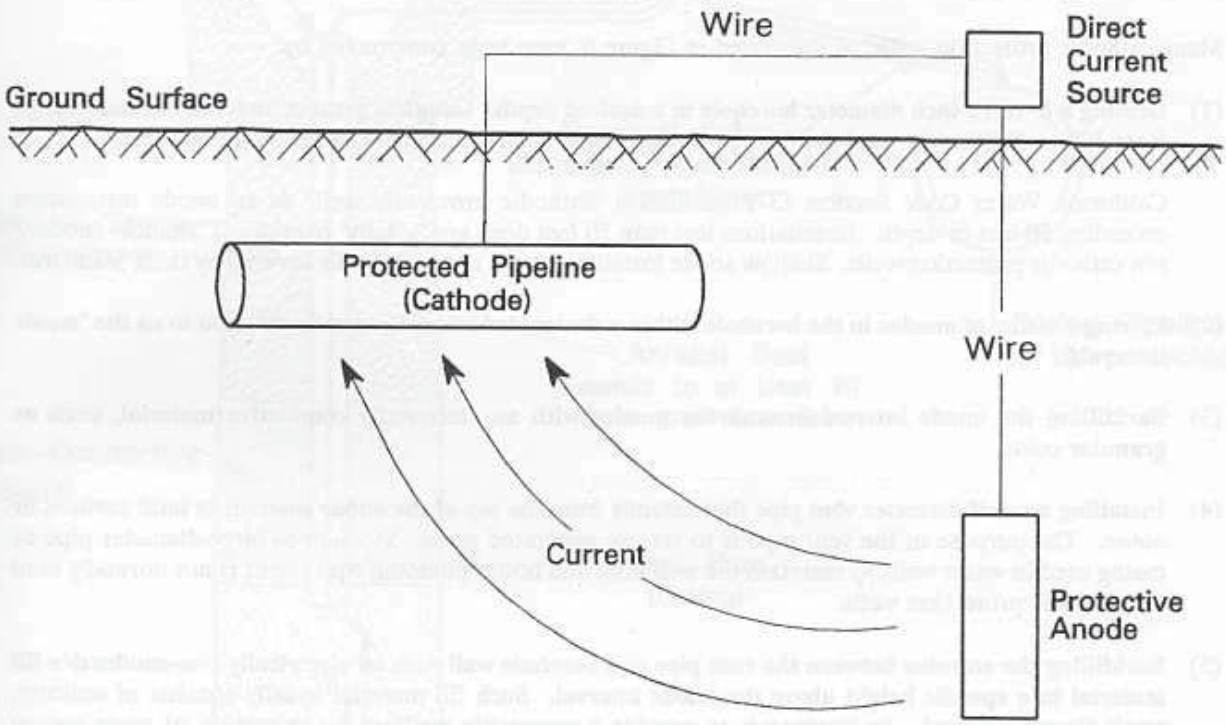

Many cathodic protection wells have been constructed to protect pipelines that transport natural gas or other "hazardous" materials. The Natural Gas Pipeline Safety Act, Public Law 90-481 adopted by Congress in August 1968, provides requirements for cathodic protection of certain pipelines.

Most cathodic protection wells in California are located in areas where underground pipelines or "conveyance" systems are numerous and must be protected. These areas include:

- South coastal region from San Diego to Santa Barbara,
- Oil-producing areas of the southern San Joaquin Valley and the Central Coast, and,
- San Francisco Bay Area.

Few cathodic protection wells exist in California north of Sacramento.

Many cathodic protection wells, as illustrated in Figure 6, have been constructed by:

(1) **Drilling a 6- to 12-inch diameter borehole to a desired depth.** Cathodic protection wells normally range from 100 to 500 feet in total depth. A few wells have been constructed to depths of 800 feet.

California Water Code Section 13711 defines a "cathodic protection well" as an anode installation exceeding 50 feet in depth. Installations less than 50 feet deep are "legally" considered "shallow anodes," not cathodic protection wells. Shallow anode installations are not specifically covered by these standards.

(2) **Placing a string of anodes in the borehole within a designated interval, usually referred to as the "anode interval."**

(3) **Backfilling the anode interval around the anodes with an electrically conductive material, such as granular coke.**

(4) **Installing a small-diameter vent pipe that extends from the top of the anode interval to land surface, or above.** The purpose of the vent pipe is to release generated gases. Medium to large-diameter pipe or casing used in water wells to maintain the well bore and house pumping equipment is not normally used for cathodic protection wells.

(5) **Backfilling the annulus between the vent pipe and borehole wall with an electrically non-conductive fill material to a specific height above the anode interval.** Such fill material usually consists of uniform, small-diameter gravel. Its purpose is to provide a permeable medium for migration of gases and to stabilize the walls of the borehole.

In the past this material was sometimes used to fill the annulus between the vent pipe and the borehole wall from the top of the anode interval to land surface. These standards require specific interval(s) of the upper annular space of a cathodic protection well be filled with sealing materials instead of gravel, to protect ground water quality.

(6) **Sealing the annulus between the vent pipe and the borehole wall, from the top of the non-conductive annular fill to land surface, with sealing material.**

(7) **Installing a permanent cover over the well at ground surface.**

(8) **Connecting the anode leads to the facility to be protected, possibly through an electrical current source.**

Individual designs of cathodic protection wells vary.

Figure 6. CROSS SECTION OF A TYPICAL CATHODIC PROTECTION WELL

(NOTE: Schematic, not to scale)

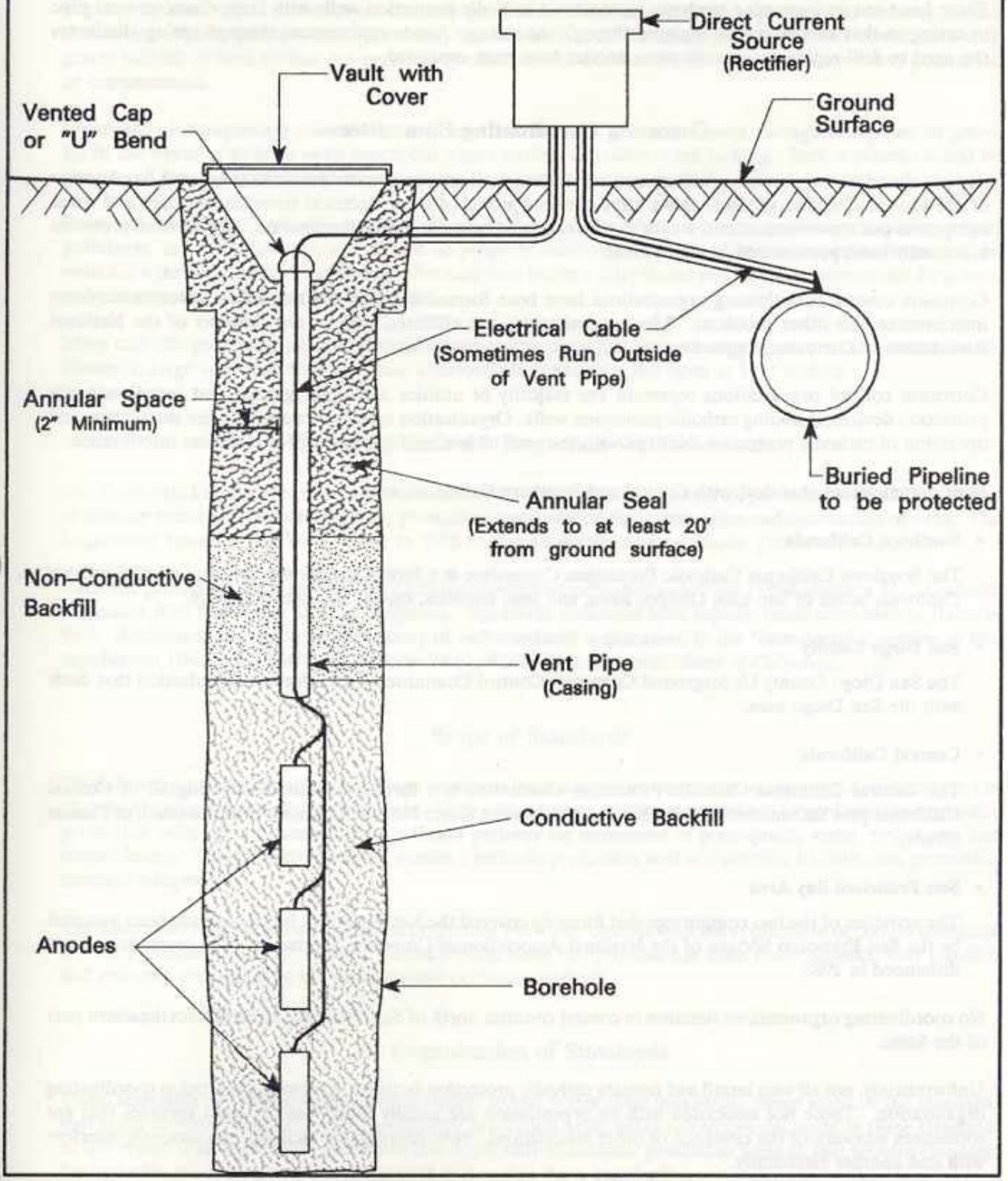

The protective anodes of a cathodic protection well usually corrode away with time. Thus a cathodic protection well's anodes determine the well's useful life. Anodes are usually designed to last 15 to 20 years.

There has been an increasing tendency to construct cathodic protection wells with large diameter vent pipe or casing so that anodes can be replaced through the casing. Anode replacement through casing eliminates the need to drill replacement wells when anodes have been expended.

Corrosion Coordinating Committees

Serious electrical interference problems can occur where cathodic protection networks criss-cross one another or are too close to one another. Also, stray currents produced from electrical transmission lines and other equipment can sometimes interfere with the operation of cathodic protection systems. Interference problems are usually most pronounced in urban areas.

Corrosion control coordinating organizations have been formed in areas of California to overcome system interferences and other problems. Most organizations are affiliated with or are chapters of the National Association of Corrosion Engineers.

Corrosion control organizations represent the majority of utilities and other groups that install cathodic protection devices, including cathodic protection wells. Organization members coordinate the installation and operation of cathodic protection facilities with the goal of minimizing problems of electrical interference.

Four organizations that deal with Central and Southern California, are:

- **Southern California**

  The Southern California Cathodic Protection Committee is a formal committee covering all of Southern California south of San Luis Obispo, Kern, and Inyo counties, except San Diego County.

- **San Diego County**

  The San Diego County Underground Corrosion Control Committee is an informal organization that deals with the San Diego area.

- **Central California**

  The Central California Cathodic Protection Committee is a formal committee covering all of Central California plus Sacramento Valley counties, and western Sierra Nevada mountain counties south of Plumas County.

- **San Francisco Bay Area**

  The activities of the two committees that formerly covered the San Francisco Bay Area have been assumed by the San Francisco Section of the National Association of Corrosion Engineers. The committees were disbanded in 1985.

No coordinating organizations function in coastal counties north of San Francisco or in the northeastern part of the State.

Unfortunately, not all who install and operate cathodic protection facilities work with a corrosion coordinating organization. Those not associated with an organization are usually individuals or local agencies that are sometimes unaware of the existence of other installations. Non-coordinated facilities can seriously interfere with one another electrically.

Need for Cathodic Protection Well Standards

Cathodic protection wells, along with other types of wells, can allow ground water quality degradation to occur. Improperly constructed or destroyed cathodic protection wells can constitute a preferential pathway for the movement of poor-quality water, pollutants, and contaminants. Cathodic protection wells constructed with gravel backfill to land surface are particularly conducive to the movement of poor-quality water, pollutants, or contaminants.

Water and electrolytes are sometimes introduced into cathodic protection wells through vent pipes, or gravel fill in the annulus, to keep wells functional where natural electrolytes are lacking. Such a practice could be considered "waste disposal" and may be illegal if poor-quality water is used.

Permanently inactive cathodic protection wells pose a threat for the movement of poor-quality water, pollutants, and contaminants, and should be properly destroyed. Permanently inactive cathodic protection wells are a threat to ground water quality because they become dilapidated with time, are sometimes forgotten, and are sometimes used for waste disposal.

Many cathodic protection wells have small diameter vent pipes that prevent entry by persons and most animals. However, large vent pipe sizes can pose a serious safety threat if left open at land surface.

History of Cathodic Protection Well Standards

The California Legislature enacted legislation in 1949 directing the California Department of Water Resources to develop recommended water-quality protection standards for the construction and destruction of wells. The Legislature amended the Water Code in 1968 to require standards for cathodic protection wells.

Cathodic protection well standards for California were first published in 1973 as DWR Bulletin 74-1, *Cathodic Protection Well Standards: State of California*. Standards presented here replace those contained in Bulletin 74-1. Additional discussion on the history of well standards is contained in the "Introduction" section of this supplement (Bulletin 74-90) and Bulletin 74-81, *Water Well Standards: State of California*.

Scope of Standards

The following are recommended minimum standards for construction, alteration, maintenance, and destruction of cathodic protection wells in California. They only serve as minimum guidelines toward ensuring cathodic protection wells do not constitute a significant pathway for movement of poor-quality water, pollutants, and contaminants. These standards do not ensure a cathodic protection well will perform its corrosion protection function adequately.

The functional requirements of cathodic protection wells may conflict with the application of certain standards for the protection of water quality. Consequently, some compromise has been made between well function and resource protection in the development of these standards.

Organization of Standards

These standards are arranged in a format similar to the Water Well Standards. Since many of the standards that apply to water wells also apply to cathodic protection wells, many references are made in these standards to the Water Well Standards. Standards that apply only to cathodic protection wells or that require emphasis for cathodic protection wells, are discussed in detail in these standards.

STANDARDS

Part I. General

Section 1. Definitions[1].

A. Cathodic Protection Well. A cathodic protection well is defined in Section 13711 of the California Water Code as:

> "...any artificial excavation in excess of 50 feet constructed by any method for the purpose of installing equipment or facilities for the protection electrically of metallic equipment in contact with the ground, commonly referred to as cathodic protection."

B. Enforcing Agency. An agency designated by duly authorized local, regional, or State government to administer and enforce laws or ordinances pertaining to the construction, alteration, maintenance, and destruction of cathodic protection wells.

C. Casing. All vent pipe, anode access tubing, electrical cable conduit, and other tubular materials that pass through the interval to be sealed.

D. Conductor Casing. A tubular retaining structure temporarily or permanently installed in the upper portion of the well boring between the wall of the well boring and the inner well casing. Conductor casing is often installed to keep the borehole open during drilling if caving conditions are expected. Despite its title, conductor casing does not normally serve an "electrical" function for cathodic protection wells.

Section 2. Exemptions Due to Unusual Conditions.

Under certain circumstances the enforcing agency may waive compliance with these standards and prescribe alternate requirements. These standards may be waived only where they are impractical or ineffective because of unusual conditions, or would result in unsatisfactory condition or well function. In waiving any of these standards, the enforcing agency shall, if at all possible, require that measures be implemented to provide the same or greater level of water-quality protection that would otherwise be provided by these standards.

Section 3. Special Standards.

The enforcing agency may prescribe measures more stringent than standards described here, where needed to protect public safety or protect water quality.

Section 4. Responsible Parties.

Corrosion control engineers are normally responsible for the design and supervision of corrosion control facilities incorporating cathodic protection wells. Pursuant to Section 13750.5 (Division 7, Chapter 10, Article 3) of the California Water Code, construction, alteration, and destruction of cathodic protection wells shall be performed by contractors licensed in accordance with the California Contractors' License Law

---

[1] Technical terms are defined in Appendix A, page 77.

(Division 3, Chapter 9, California Business and Professions Code), except where exempted by law. Above-ground electrical facilities for cathodic protection wells should be installed by an appropriately licensed contractor.

Section 5. Reports.

Cathodic protection well construction, alteration, and destruction reports shall be completed on forms provided by the California Department of Water Resources. Other types of forms may be used for submission to the Department with the prior approval of the Department. The completed forms shall be submitted to the Department in accordance with relevant provisions of Sections 13750 through 13754 (Division 7, Chapter 10, Article 3) of the California Water Code. Information concerning completion and submission of well construction, alteration, and destruction reports is contained in *Guide to the Preparation of the Water Well Drillers Report*, Department of Water Resources, October, 1977, or its latest revision.

Part II. Cathodic Protection Well Construction

Section 6. Well Location With Respect to Pollutants and Contaminants, and Structures.

A. Separation. Cathodic protection wells shall be located an adequate distance from known or potential sources of pollution or contamination, where site constraints and corrosion control considerations allow. Potential sources of pollution and contamination include those listed in Section 8 of the Water Well Standards.

As specified in Section 7 below, the length of the annular seal for a cathodic protection well shall be increased if the well is located in a congested urban area, or is located within 100 feet of any potential source of pollution or contamination.

B. Flooding and Drainage. Cathodic protection wells should be located in areas protected from flooding, if possible. Wells located in areas of flooding shall be protected from flood waters and drainage, including protective measures outlined in Section 8, below.

Ground surface surrounding a cathodic protection well shall slope away from the well. Drainage from areas surrounding a cathodic protection well shall be directed away from the well.

C. Accessibility. All cathodic protection wells shall be located an adequate distance from buildings and other structures to allow access for well maintenance, modification, repair, and destruction, unless otherwise approved by the enforcing agency.

Section 7. Sealing the Upper Annular Space.

The space between the cathodic protection well casing and the wall of the well boring, often referred to as the "annular space," shall be effectively sealed to prevent it from being a preferential pathway for the movement of poor-quality water, pollutants, or contaminants. In some cases, secondary purposes of the annular seal are to stabilize the borehole wall, protect casing from degradation or corrosion, and ensure the structural integrity of the casing.

General discussion of sealing requirements and methods is contained in Section 9, Section 13, and Appendix B of the Water Well Standards. Special requirements for sealing cathodic protection wells are:

A. Minimum Depth of Annular Seal.

1. Minimum Depth. The annular space shall be filled with appropriate sealing material from ground surface to a depth of at least 20 feet below land surface. The annular space shall be sealed to a depth of at least 50 feet below land surface in congested urban areas, or where a cathodic protection well is within 100 feet of **any** potential source of pollution or contamination. Additional annular sealing material shall be installed to greater depths where adverse conditions exist that increase the risk of pollution or contamination of ground water.

2. Fill. Any annular space existing between the base of the annular surface seal and the top of the anode and conductive fill interval shall be filled with appropriate fill or sealing material. Fill material should consist of washed granular material such as sand, pea gravel, or sealing material. Fill material shall not be subject to decomposition or

consolidation after placement and shall be free of pollutants and contaminants. Fill material shall not contain drill cuttings or drilling mud. Sealing material is often more practical and economical to use for filling the annular space than granular material.

3. Sealing-Off Strata. Additional annular sealing material shall be placed below the minimum depth of the annular surface seal, as needed, to prevent the movement of poor-quality water, pollutants, and contaminants through the well to zones of good-quality water. Requirements for sealing off zones are in Section 10, below.

B. Sealing Conditions. Requirements for sealing the annular space under varied conditions are detailed in Section 9, Subsection B of the Water Well Standards.

C. Radial Thickness of Seal. A minimum of 2 inches of sealing material shall be maintained between all casings and the borehole wall within the interval to be sealed, except where temporary conductor casing cannot be removed as noted in Section 9 of the Water Well Standards. At least 2 inches of sealing material shall be maintained between all casings in a borehole, within the interval to be sealed unless otherwise approved by the enforcing agency. Additional space shall be provided, where needed, to allow casings to be properly centralized and spaced and allow the use of a tremie pipe during well construction (if required), especially for deeper wells.

D. Sealing Material. Sealing material shall consist of neat cement, sand-cement, concrete, or bentonite clay as discussed in Section 9 of the Water Well Standards. Cement-based sealing material shall be used opposite zones of fractured rock used. Concrete shall only be used at the approval of the enforcing agency. Drill cuttings and used drilling mud shall not be used as any part of sealing material.

E. Placement of Seal. Standards for the placement of annular seals are described in Section 9 and Appendix B of the Water Well Standards.

Section 8. Surface Construction Features.

Surface construction features of a cathodic protection well shall serve to prevent physical damage to the well; prevent the entry of surface water, pollutants, and contaminants; and prevent unauthorized access.

A. Locking Cover. The top of a cathodic protection well shall be protected by a locking cover or equivalent level of protection to prevent unauthorized access. All such covers shall allow the venting of gases.

B. Casing Cap. The top of a cathodic protection well casing shall be fitted with a watertight cap, cover, "U" bend, or equivalent device to prevent the entry of water, pollutants, and contaminants into the well bore. All such covers shall allow venting of gases from the well.

C. Flooding. The top of the well casing shall terminate above ground surface and known levels of flooding, except where site conditions, such as vehicular traffic, will not allow.

D. Bases. A concrete base or pad shall be constructed around the top of a cathodic protection well casing at ground surface and contact the annular seal, unless the top of the casing is to be below ground surface as provided by Subsection E, below. The base shall be at least 4 inches thick and shall slope to drain away from the well casing. The base shall extend at least

2 feet laterally in all directions from the outside of the well boring, unless otherwise approved by the enforcing agency.

The base shall be free of cracks, voids, and other significant defects likely to prevent water tightness. Contacts between the base and the annular seal, and the base and the well casing must be water tight and must not cause the failure of the well casing or annular seal.

Where cement-based annular sealing material is used, the concrete base shall be poured before the annular seal has set, unless otherwise approved by the enforcing agency.

E. Vaults. At the approval of the enforcing agency, the top of a cathodic protection well may be below ground surface because of traffic or other critical considerations. A watertight, structurally-sound vault, or equivalent feature, shall be installed to house the top of the well casing if it terminates below ground surface.

The vault shall extend from the top of the annular seal to at least ground surface. In no case shall the top of the annular seal be more than 4 feet below ground surface.

The vault shall contact the annular seal in a manner to form a watertight and structurally-sound connection. Contacts between the vault and the annular seal, and the vault and the well casing (if any), shall not fail, or cause the failure of the well casing or annular seal.

Where cement-based annular sealing materials are used, the vault shall be set into or contact the annular sealing material before it sets, unless otherwise approved by the enforcing agency. If bentonite-based sealing material is used for the annular seal, the vault shall be set into the bentonite before it is fully hydrated.

Cement-based sealing material shall be placed between the outer walls of the vault and the excavation into which it is placed to form a proper, structurally sound foundation for the vault, and to seal the space between the vault and excavation.

Sealing material surrounding the vault shall extend from the top of the annular seal to ground surface, unless precluded in areas of freezing. If cement-based sealing material is used for both the annular seal and the space between the excavation and vault, the sealing material shall be emplaced in a "continuous pour." In other words, cement-based sealing material shall be placed between the vault and excavation and contact a cement-based annular seal before the annular seal has set.

The vault cover or lid shall be watertight but shall allow the venting of gases. The lid shall be fitted with a security device to prevent unauthorized access and shall be clearly and permanently labeled "CATHODIC PROTECTION WELL." The vault and its lid shall be strong enough to support vehicular traffic where such traffic might occur.

The top of the vault shall be set at grade, or above, so that drainage is away from the vault. The top of the casing contained within the vault shall be capped in accordance with requirements of Subsection B, above so that water, contaminants, and pollutants that may enter the vault will not enter the well casing.

F. Protection From Vehicles. Protective steel posts, or the equivalent, shall be installed around a cathodic protection well casing where it is terminated above ground surface in areas of vehicular traffic. The posts shall be easily seen and shall protect the well from vehicular impact.

Additional requirements for surface construction features are contained in Section 10 of the Water Well Standards.

Section 9. Casing.

Vent pipe, anode access tubing, and any other tubular materials that pass through the interval to be filled and sealed are all considered casing for the purpose of these standards. Materials used for cathodic protection well casing generally shall meet the requirements for casing materials and their installation in Section 12 of the Water Well Standards. Variance from the standards shall be at the approval of the enforcing agency. It is recommended that practices prescribed by the National Association of Corrosion Engineers also be followed in the design and installation of gas vents and electrical conduit.

Cathodic protection well casing should be at least 2 inches in internal diameter to facilitate eventual well destruction.

Section 10. Sealing-Off Strata.

If a cathodic protection well penetrates a stratum or strata below the minimum required annular surface seal depth specified in Section 7, above and that stratum contains poor-quality water, pollutants, or contaminants that could mix with and degrade water contained in other strata penetrated by the well, additional annular sealing material shall be placed below the minimum required annular surface seal to prevent mixing and water-quality degradation.

The following minimum requirements shall be observed for isolating zones containing poor-quality water, pollutants, or contaminants for various cases:

Case 1. Upper Stratum. If a stratum containing poor-quality water, pollutants, or contaminants lies above a stratum to be protected, annular seal material shall extend from the top of the stratum containing the poor-quality water, pollutants, or contaminants down to at least 10 feet into the confining layer separating the two strata, or through the entire thickness of the confining layer, whichever is least.

Case 2. Lower Stratum. If a stratum containing poor-quality water, pollutants, or contaminants lies below a stratum to be protected, the annular space opposite the stratum to be protected shall be sealed along its full length. The seal shall extend at least 10 feet into the confining layer separating the two strata, or through the entire thickness of the confining layer, whichever is least.

Case 3. Multiple Strata.

a. **Where two or more strata containing poor-quality water, pollutants, or contaminants are adjacent to one another and overlie a stratum to be protected,** the annular space opposite the strata containing poor-quality water, pollutants, or contaminants and opposite all interbedded confining layers shall be sealed. The annular seal shall extend at least 10 feet down into, or completely through, whichever is least, the confining layer separating the strata containing poor-quality water, pollutants, or contaminants and the underlying stratum to be protected.

b. **Where two or more strata containing poor-quality water, pollutants, or contaminants underlie a stratum to be protected,** the annular space opposite the stratum to be protected shall be sealed. The seal shall continue down at least 10 feet into, or completely through, whichever is least, the confining layer separating the stratum to be protected and the underlying strata containing poor-quality water, pollutants or contaminants.

c. **Where two strata containing poor-quality water, pollutants, or contaminants are separated by a stratum to be protected,** the annular space opposite the stratum to be protected, the confining strata underlying and overlying the stratum to be protected, and the upper stratum containing poor-quality water, pollutants, or contaminants shall be sealed off.

The supplementary seals described in the cases above shall be extended up to and contact the base of the required minimum annular surface seal described in Section 7 above, if they are otherwise required to be within 10 feet of the surface seal. Sealing the entire annulus above the anode interval will often economically fulfill the conditions outlined above.

Requirements for sealing materials and their placement are described in Section 7, above.

Section 11. Repair of Cathodic Protection Wells.

Materials used for repairing cathodic protection well casing shall meet the requirements of Section 9, above.

Section 12. Temporary Cover.

The well or borehole opening and any associated excavations shall be covered at the surface to prevent the entry of foreign material, water, pollutants, and contaminants, and to ensure public safety whenever work is interrupted by such events as overnight shutdown, poor weather and required waiting periods to allow setting of sealing materials and the performance of tests. The cover shall be held in place or weighted down in such a manner that it cannot be removed except by equipment or tools.

Part III. Destruction of Cathodic Protection Wells

Section 13. Purpose of Destruction.

A cathodic protection well that is no longer useful, permanently inactive or "abandoned" must be properly destroyed to:

(1) Ensure the quality of ground water is protected, and,

(2) Eliminate a possible physical hazard to humans and animals.

Section 14. Definition of "Abandoned" Cathodic Protection Well.

A cathodic protection well is considered "abandoned" or permanently inactive when its anodes are exhausted and cannot, or will not, be replaced. A cathodic protection well is also considered "abandoned" or permanently inactive if it has not been used for one year, unless the owner demonstrates intention to use it again. To provide evidence of intention for future use of a well, the well owner, in accordance with Section 24400 of the Health and Safety Code, shall maintain the well in such a way that the following requirements are met:

"(1) The well shall not allow impairment of the quality of water within the well and ground water encountered by the well.

(2) The top of the well or well casing shall be provided with a cover, that is secured by a lock or by other means to prevent its removal without the use of equipment or tools, to prevent unauthorized access, to prevent a safety hazard to humans and animals, and to prevent illegal disposal of wastes in the well. The cover shall be watertight where the top of the well casing or other surface openings to the well are below ground level, such as in a vault or below known levels of flooding. The cover shall be watertight if the well is inactive for more than five consecutive years. A pump motor, angle drive, or other surface feature of a well, when in compliance with the above provisions, shall suffice as a cover.

(3) The well shall be marked so as to be easily visible and located, and labeled so as to be easily identified as a well.

(4) The area surrounding the well shall be kept clear of brush, debris, and waste materials."

Section 15. General Requirements.

All permanently inactive or "abandoned" cathodic protection wells shall be properly destroyed. The purpose of destruction is to prevent a possible safety hazard to humans and animals and to eliminate the well structure as a possible means for the preferential migration of poor-quality water, pollutants, and contaminants.

Section 16. Requirements for Destroying Cathodic Protection Wells.

General requirements for well destruction are contained in Section 23 of the Water Well Standards. Special considerations for cathodic protection wells are as follows:

A. Preliminary Work. A cathodic protection well shall be investigated before it is destroyed to determine its condition, details of its construction and whether conditions exist that will interfere with filling and sealing.

The well shall be sounded immediately before it is destroyed to make sure that no obstructions exist that will interfere with filling and sealing. The well shall be cleaned before destruction, as needed, to ensure that all undesirable materials, including obstructions to filling and sealing, debris, and pollutants and contaminants that could interfere with well destruction are removed for disposal. The enforcing agency shall be notified as soon as possible if pollutants and contaminants are known or suspected to be in a well to be destroyed. Well destruction operations may then proceed only at the approval of the enforcing agency. The enforcing agency should be contacted to determine requirements for proper disposal of materials removed from a well to be destroyed.

B. Filling and Sealing Conditions. The following minimum requirements shall be followed when various conditions are encountered.

1. Wells that only penetrate unconsolidated material and a single "zone" of ground water. At a minimum, the upper 20 feet of the well casing and the annulus between the well casing and borehole wall (if not already sealed) shall be completely sealed with suitable material. Sealing material shall extend to a minimum depth of 50 feet below land surface if the well to be destroyed is located in an urban area, or is within 100 feet of any potential source of pollution or contamination. Additional sealing material may be needed if adverse conditions exist. The remainder of the well below the minimum surface seal shall be filled with suitable granular fill material, such as clean sand or pea gravel, or with sealing material.

2. Wells that penetrate several water-bearing strata. The upper portion of the well casing and annular space shall be filled with sealing material as described in Item 1, above. Strata encountered below the surface seal that contain poor-quality water, pollutants, or contaminants that could mix with and degrade water in other strata penetrated by the well, shall be effectively isolated by sealing the well bore and annulus within intervals specified in Section 10, above. The remainder of the well shall be filled with suitable granular fill or sealing material.

3. Wells penetrating fractured rock. Sealing material shall be installed as outlined in Items 1 and 2, above. Cement-based sealing material shall be used opposite fractured rock. The remainder of the well shall be filled with fill or sealing material, as appropriate.

4. Wells in nonfractured consolidated strata. Sealing material shall be installed as outlined in Items 1 and 2, above. The remainder of the well shall be filled with fill or sealing material, as appropriate.

5. Wells penetrating water-bearing zones or aquifers of special significance. The enforcing agency may require that specific water-bearing zones be sealed off for well destruction.

C. Placement of Material. The placement of sealing materials for cathodic protection well destruction is generally described in Section 23 and Appendix B of the Water Well Standards. The following additional requirements shall be observed in destroying cathodic protection wells.

Casing, cables, anodes, granular backfill, conductive backfill, and sealing material shall be removed as needed, by redrilling, if necessary, to the point needed to allow proper placement of sealing materials within required sealing intervals. Removal of some or all well materials will likely be required for cathodic protection wells that were not constructed in accordance with

these standards, or standards adopted by the Southern California Cathodic Protection Committee in December 1969.

Casing that cannot be removed shall be adequately perforated or punctured at specific intervals to allow pressure injection of sealing materials into granular backfill and all other voids that require sealing.

The following requirements shall be observed in placing fill and sealing material in cathodic protection wells to be destroyed.

1. Placement Method. The well shall be filled and sealed with appropriate material upward from the bottom of the well using a tremie pipe or equivalent.

   Sealing material shall be placed by methods (such as by the use of a tremie pipe or equivalent) that prevent freefall, bridging, or dilution of the sealing materials, or separation of aggregates from sealants. Sealing materials shall not be installed by freefall unless the interval to be sealed is dry and no deeper than 30 feet below ground surface.

2. Timing of Placement. Sealing material shall be placed in one continuous operation (or "pour") from the bottom to the top of the well unless conditions in the well dictate that sealing operations be conducted in a staged manner and prior approval is obtained from the enforcing agency.

3. Ground Water Flow. Special care shall be used to restrict the flow of ground water into a well while fill and sealing material is being placed, if subsurface pressure causing the flow of water is significant.

4. Sealing Pressure. Pressure required for placement of cement-based sealing material shall be maintained long enough for the cement-based sealing material to set.

5. Verification. Verification shall be made that the volume of sealing and fill material placed in a well during destruction operations equals or exceeds the volume to be filled and sealed. This is to help determine that the well has been properly destroyed and that no jamming or bridging of the fill or sealing material has occurred.

D. Sealing Materials. Materials used for sealing cathodic protection wells for destruction shall have low permeabilities so that the volume of water and possible pollutants and contaminants passing through them will be of minimal consequence. Sealing material shall be compatible with the chemical environment into which it is placed and shall have mechanical properties compatible with present and future site uses.

Suitable sealing materials include neat cement, sand-cement, concrete, and bentonite, as described in Section 9 of the Water Well Standards. Sealing materials used for isolating zones of fractured rock shall be cement-based, as described in Subsection B, above. Drilling mud or drill cuttings shall not be used as any part of a sealing material for well destruction. Concrete may be used as a sealing material at the approval of the enforcing agency.

E. Fill Material. Many fill materials are suitable for destruction of cathodic protection wells. These include clean, washed sand or gravel or sealing material. Fill material shall be free of pollutants and contaminants and shall not be subject to decomposition or consolidation after placement. Fill material shall not contain drilling mud or cuttings.

F. Additional Requirements for Destruction of Cathodic Protection Wells in Urban Areas. The following additional requirements shall be met at each well site in urban areas, unless otherwise approved by the enforcing agency:

(1) The upper surface of the sealing material shall end at a depth of 5 feet below ground surface, and,

(2) If the casing was not extracted during destruction and sealing operations, a hole shall be excavated around the well casing to a depth of 5 feet below ground surface after sealing operations have been completed and sealing materials have adequately set and cured. The exposed well casing shall then be removed by cutting the casing at the bottom of the excavation. The excavation shall then be backfilled with clean, native soil or other suitable material.

G. Temporary Cover. The well borehole and any associated excavations shall be covered at the surface to prevent the entry of foreign material, water, pollutants, and contaminants and to ensure public safety whenever work on the well is interrupted by such events as overnight shutdown, poor weather, and required waiting periods to allow setting of sealing materials and performance of tests. The cover shall be held in place or weighted down in such a manner that it cannot be removed except by equipment or tools.

APPENDICES

APPENDIX A

Definition of Terms

Protective Anode - A metallic object designed to corrode in place of the object it is designed to protect.

Cathodic Protection[1] - A technique to prevent the corrosion of a metal surface by making that surface the cathode of an electrochemical cell.

Cement, Portland Cement - A cement that contains oxides of calcium, aluminum, iron, and silicon made by heating a mixture of limestone and clay in a kiln and pulverizing the resultant clinker, as defined in ASTM C150. Portland cement is also considered a hydraulic cement, because it must be mixed with water to form a cement-water paste with the ability to develop strength and harden, even under water.

Centralizer - A device that assists in centering tubular materials in a borehole.

Conductance, Specific - A measure of the ability of water to conduct electric current at 77 degrees Fahrenheit. It is related to the total concentration of ions in the water.

Corrosion[1] - The deterioration of a material, usually a metal, because of a reaction with its environment.

Drilling Fluid - A fluid (liquid or gas) used in drilling operations to remove cuttings from a borehole, to clean and cool the drilling bit, to reduce friction between the drill stem and the borehole wall, and, in some cases, to prevent caving or sloughing of the borehole.

Electrolyte[1] - A chemical substance or mixture, usually liquid, containing ions that migrate in an electric field. The term electrolyte refers to the soil or liquid adjacent to, and in contact with a buried or submerged metallic structure including the moisture and other chemicals contained therein.

Interference[1] - The situation that arises when a foreign substructure is affected in any way by a direct current source.

Rectifier[1] - An electronic device that changes alternating current to direct current.

---

[1] Definition from National Association of Corrosion Engineers Standard RP-01-69 or RP-05-72.

APPENDIX B

REFERENCES

Since Bulletin 74-81 was published in mid-1981 several new or revised publications have been issued that address ground water or well construction. This appendix lists publications issued or revised since 1981 and selected other publications that were reviewed during the preparation of this supplement. Publications that were used for Bulletin 74-81 that have since been revised are identified by a number in parentheses. These numbers refer to the publication's original position in the bibliography of Bulletin 74-81 (Appendix E, page 83).

Books and Pamphlets

Aller, Linda. *Methods for Determining the Location of Abandoned Wells.* A cooperative study by the National Water Well Association, East Central University, and the Robert S. Kerr Environmental Research Laboratory, U. S. Environmental Protection Agency. National Water Well Association. January 1984.

American Society of Agricultural Engineers. *Designing and Constructing Irrigation Wells.* ASAE Engineering Practice: ASAE EP 400.1. Revised February 1987.

American Society for Testing and Materials[1]. *Proposed Recommended Practice for Design and Installation of Ground Water Monitoring Wells in Aquifers.* Unnumbered, undated draft.

American Water Works Association[2]. *Standard for Backflow Prevention Devices - Reduced Pressure Principle and Double Check Valves.* AWWA C506-78 (R83). 1983.

. *Design and Construction of Small Water Systems; A Guide for Managers.* 1984.

. *Standard Specifications for Deep Wells.* AWWA A100-84. 1984 (6).

Steel Water Pipe -- A Guide for Design and Installation. AWWA Manual No. M11. 1985.

. *Centrifugal Pump Fundamentals.* Pumps and Motor Series - Part 1. 1987.

_____. *Review of Water Industry Plastic Pipe Practices.* Research Report. Prepared by Department of Civil Engineering, University of California, Berkeley. 1987.

. *Standard for Disinfection of Wells.* AWWA C654-87. 1987.

Byron Jackson, Inc. *Applied Engineered Cementing. Volume I.* Undated.

---

[1] American Society for Testing and Materials, 1916 Race Street, Philadelphia, PA 19103-1187, Telephone No.: (215) 299-5585.

[2] American Water Works Association, 6666 West Quincy Avenue, Denver, CO 80235, Telephone No.: (303) 794-7711.

California Department of Food and Agriculture. *Sampling for Pesticide Residues in California Well Water: 1986 Well Inventory Data Base. First Annual Report to the Legislature, State Department of Health Services and State Water Resources Control Board pursuant to the Pesticide Contamination Prevention Act.* December 1, 1986.

California Department of Health Services. *Organic Chemical Contamination of Large Public Water Systems in California.* April 1986.

California Governor's Task Force on Toxics, Waste and Technology. *Final Report.* Two volumes. May 1986.

California State Public Utilities Commission. *General Order No. 112-C; Rules Governing Design, Construction, Testing, Maintenance and Operation of Utility Gas Gathering, Transmission and Distribution Piping Systems.* Effective April 30, 1971. Revised January 18, 1977.

California State Water Resources Control Board. *Leaking Underground Fuel Tank (LUFT) Field Manual: Guidelines for Site Assessment, Cleanup, and Underground Storage Tank Closure.* State of California. December 1987.

California Water Resources Center, University of California, Davis. *Proceedings of the Fifteenth Biennial Conference on Ground Water. September 23-25, 1985.* In cooperation with the California Department of Water Resources and the California State Water Resources Control Board. April 1986.

_____. *Proceedings of the Sixteenth Biennial Conference of Ground Water. September 22-23, 1987.* In cooperation with the California Department of Water Resources and the California State Water Resources Control Board. May 1988.

Congress of the United States, Office of Technology Assessment. *Protecting the Nation's Groundwater from Contamination.* Two volumes. October 1984.

Halliburton Company. *Halliburton Cementing Tables.* 1981.

Illinois Department of Energy and Natural Resources, Illinois State Water Survey and Illinois State Geological Survey. *Procedures for the Collection of Representative Water Quality Data from Monitoring Wells.* 1981.

Illinois State Water Survey. *A Guide to the Selection of Materials for Monitoring Well Construction and Ground-Water Sampling.* ISWS Contract Report 327. 1983.

Johnson Division, Signal Environmental Systems, Inc. Fletcher P. Driscoll, Principal Author and Editor. *Ground Water and Wells.* 1986. (44)

Le Grand, Harry E. *A Standardized System for Evaluating Waste-Disposal Sites.* Second Edition. National Water Well Association. 1983.

Morrison, Robert D. *Ground Water Monitoring Technology -- Procedures, Equipment and Applications.* Timco Manufacturing Company, Inc. 1983.

_____. *The Engineers' Manual for Water Well Design.* 1985.

National Association of Corrosion Engineers. *Recommended Practice -- Control of External Corrosion on Under ground or Submerged Metallic Piping Systems.* NACE Standard RP-01-69. 1983 Revision.

_____. *Recommended Practice -- Design, Installation, Operation, and Maintenance of Impressed Current Deep Groundbeds.* NACE Standard RP-05-72. June 1972.

_____. Western Region. *Proceedings -- Western States Corrosion Seminar -- V, California State Polytechnic College, Pomona, California, May 4-6, 1971.* 1972.

National Sanitation Foundation. *Standard 14-Plastic Piping System Components and Related Materials.* Revised December 1988.

_____. *ANSI[1]/NSF 60 - 1988. Drinking Water Treatment Chemicals - Health Effects.* Revised October 1988.

_____. *ANSI[1]/NSF 61 - 1990. Drinking Water System Components - Health Effects.* Revised May 1990.

National Water Well Association. *State Authorities for Abating, Containing, and Monitoring Groundwater Pollution.* December 1984.

_____. *Proceedings of the FOCUS Conference on Southwestern Ground Water Issues.* March 23-25, 1988.

Nielsen, David M. and Aller, Linda. *Methods for Determining the Mechanical Integrity of Class II Injection Wells.* A cooperative study by the National Water Well Association, East Central University, and the Robert S. Kerr Environmental Research Laboratory, U. S. Environmental Protection Agency. National Water Well Association. 1984.

Roscoe Moss Company. *A Guide to Water Well Casing and Screen Selection.* 1982.

San Francisco Bay Regional Water Quality Control Board; Sanitary Engineering Environmental Health Research Laboratory, University of California, Berkeley; and Santa Clara Valley Water District. *Assessment of Contamination from Leaks of Hazardous Materials in the Santa Clara Ground Water Basin, 205j Report.* UCB/SEEHRL Report No. 85-6. July 1985.

Santa Clara Valley Water District. *Groundwater Monitoring Guidelines.* December 1983.

Southern California Cathodic Protection Committee. *Tentative Deep Anode Standards to Comply With California Department of Water Resources Water Well Standards.* Drawing Numbers A-497-S-1 and A-497-S-2. Revision of December 10, 1969.

Uni-Bell Plastic Pipe Association. *Vinyl Chloride: The Control of Residual Vinyl Chloride Monomer in PVC Water Pipe.* 1981.

U. S. Environmental Protection Agency, Office of Drinking Water. *Workshops on (Risk) Assessment and Management of Drinking Water Contamination.* Revised March 1987.

_____. Office of Ground-Water Protection. *Wellhead Protection, A Decision-Makers Guide.* May 1987.

---

[1] American National Standards Institute.

_____. *Guidelines for Delineation of Wellhead Protection Areas*. June 1987.

_____. *Guidance for Applicants for State Wellhead Protection Program Assistance Funds Under the Safe Drinking Water Act*. June 1987.

_____. Office of Research and Development. *Monitoring Groundwater Quality: Monitoring Methodology*. EPA 600/4-76-026. June 1976.

_____. Office of Solid Waste. *Problem Areas in Ground-Water Monitoring System Design for Waste Management Facilities*. Notes from a Seminar Presented December 4-5, 1986.

_____. Office of Waste Programs Enforcement and Office of Solid Waste and Emergency Response. *RCRA Ground-Water Monitoring Compliance Order Guidance (Final) and RCRA Ground-Water Monitoring Enforcement Guidance Document (Draft)*. August 1985.

_____. Office of Waste Programs Enforcement and Office of Solid Waste and Emergency Response. *RCRA Ground-Water Monitoring Technical Enforcement Guidance Document*. September 1986.

_____. Office of Waste Programs Enforcement. *RCRA Ground-Water Monitoring Enforcement, Use of the TEGD and COG*. Notes from a course sponsored by EPA Region IX and the RCRA Enforcement Division, Office of Waste Programs Enforcement, March 3-5, 1987.

_____. Office of Water Supply. *DRASTIC: A Standardized System for Evaluating Ground Water Pollution Potential Using Hydrogeologic Settings*. EPA 600/2-85-18. May 1985.

_____. Office of Water and Waste Management. *Procedures Manual for Ground Water Monitoring at Solid Waste Disposal Facilities*. Publication SW-611. Second printing, December 1980.

U. S. General Services Administration, National Archives and Records Service, Office of the Federal Register. *Code of Federal Regulations, Title 49, Transportation, Chapter 1, Hazardous Materials Regulations Board, Department of Transportation, Part 192, Transportation of Natural and Other Gas by Pipeline: Minimum Federal Safety Standards. Subpart I -- Requirements for Corrosion Control*. Edition of October 1, 1987.

U. S. Geological Survey. *Basic Ground-Water Hydrology*. Water Supply Paper 2220. 1983.

_____. *Study and Interpretation of the Chemical Characteristics of Natural Water*. Third Edition. Water Supply Paper 2254. 1985.

Water Systems Council. *Water Systems Handbook*. Eighth Edition. 1983.

_____. *Large Submersible Water Pump Manual*. First Edition. 1986.

_____. *Recommended Standards (PAS-1) and Installation Procedures for Sanitary Water Well Pitless Adapters and Units*. Sixth Edition, March 1987.

Williams, Dennis E. *The Well/Aquifer Model, Initial Test Results*. Roscoe Moss Company. 1981.

Periodicals

Civil Engineering. American Society of Civil Engineers. Published monthly since 1930.

Engineering News-Record. McGraw-Hill Publishing Company. Published weekly since 1902.

Ground Water. Journal of the Association of Ground Water Scientists and Engineers, a Division of the National Water Well Association. Published bimonthly since 1962.

Ground Water Age. National Trade Publications, Inc. Published monthly since 1966.

Ground Water Monitoring Review. Water Well Journal Publishing Company in cooperation with the National Water Well Association. Published quarterly since 1981.

Ground Water Newsletter. Water Information Center, Inc. Published semi-monthly since 1971.

Journal of the American Water Works Association. Published monthly since 1920, quarterly between 1914 and 1919.

Materials Performance. National Association of Corrosion Engineers. Published monthly since January 1974. From March 1970 through December 1973 published as *Materials Protection and Performance*. From 1962 through February 1970 published as *Materials Protection*.

Water Well Journal. Water Well Journal Publishing Company in cooperation with the National Water Well Association. Published monthly since 1948.

Western Water. Water Education Foundation. Published monthly since 1949.

Laws, Rules and Regulations

A. Pertinent laws and regulations of the State of California as contained in:

- California Code of Regulations
- California Business and Professions Code
- California Health and Safety Code
- California Public Resources Code
- California Water Code

B. The State Water Resources Control Board Model Water Well Ordinance.

C. Existing ordinances of the counties of California pertaining to the construction, alteration, and destruction of wells.

D. Laws, regulations, and recommendations of the various states pertaining to the construction, alteration, or destruction of wells.

91 82125